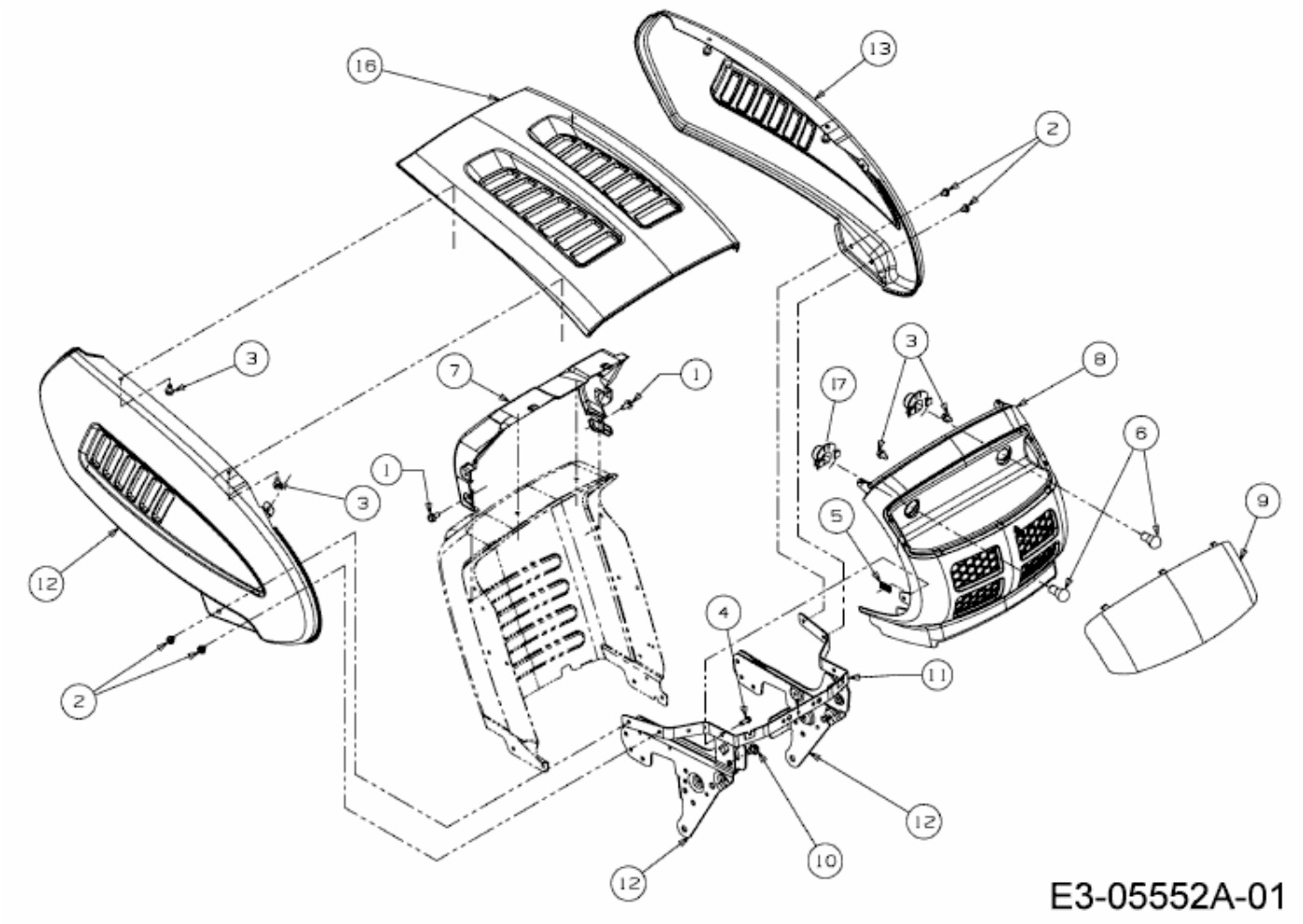PLATINUM SD 25/107 H > 13AI793G686 (2010) > MOTORHAUBE 3-STYLE