GLX 122 RHL-SK > 13AI51GJ490 (2009) > MESSERSPINDEL 618-04162B

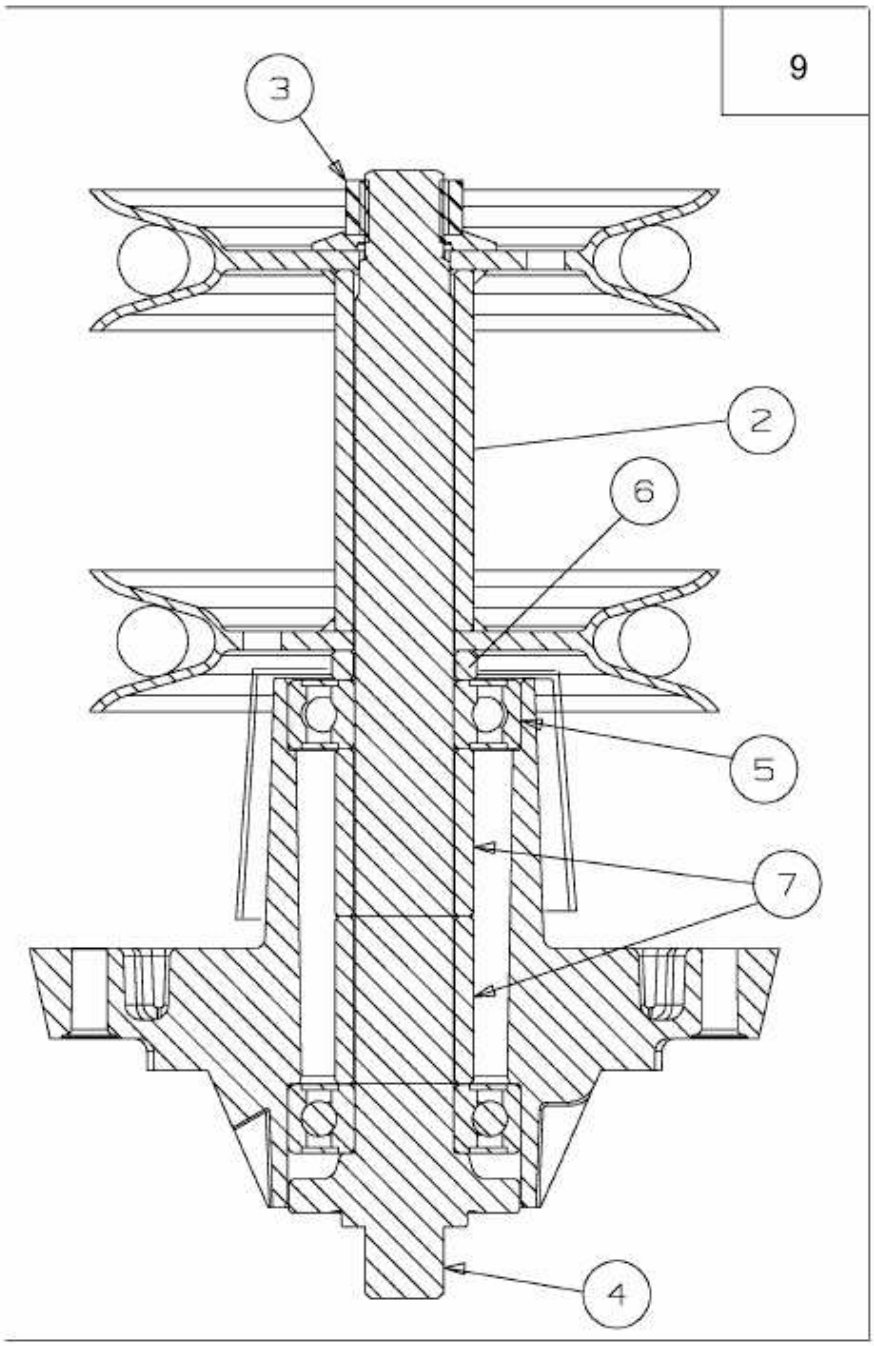

E3-02423A-01