FORMULA 97/13.5 T > 13AH779F637 (2007) > FAHRANTRIEB, VARIATOR

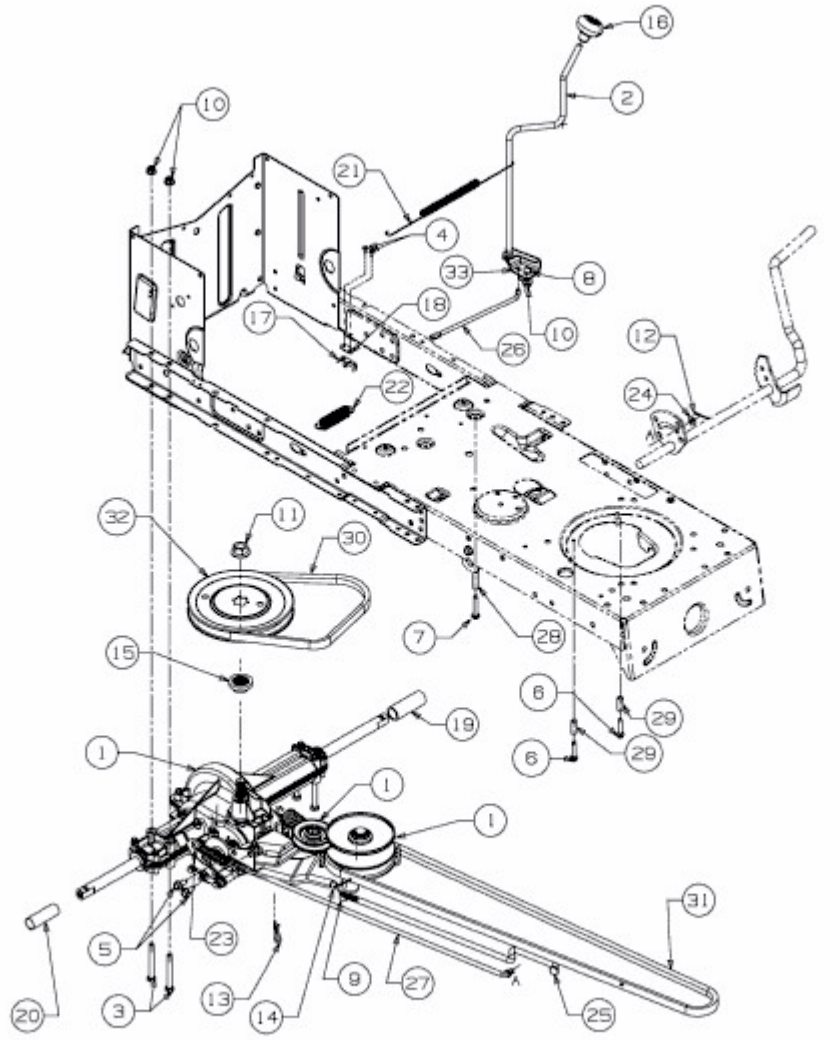

E3-02723B-01