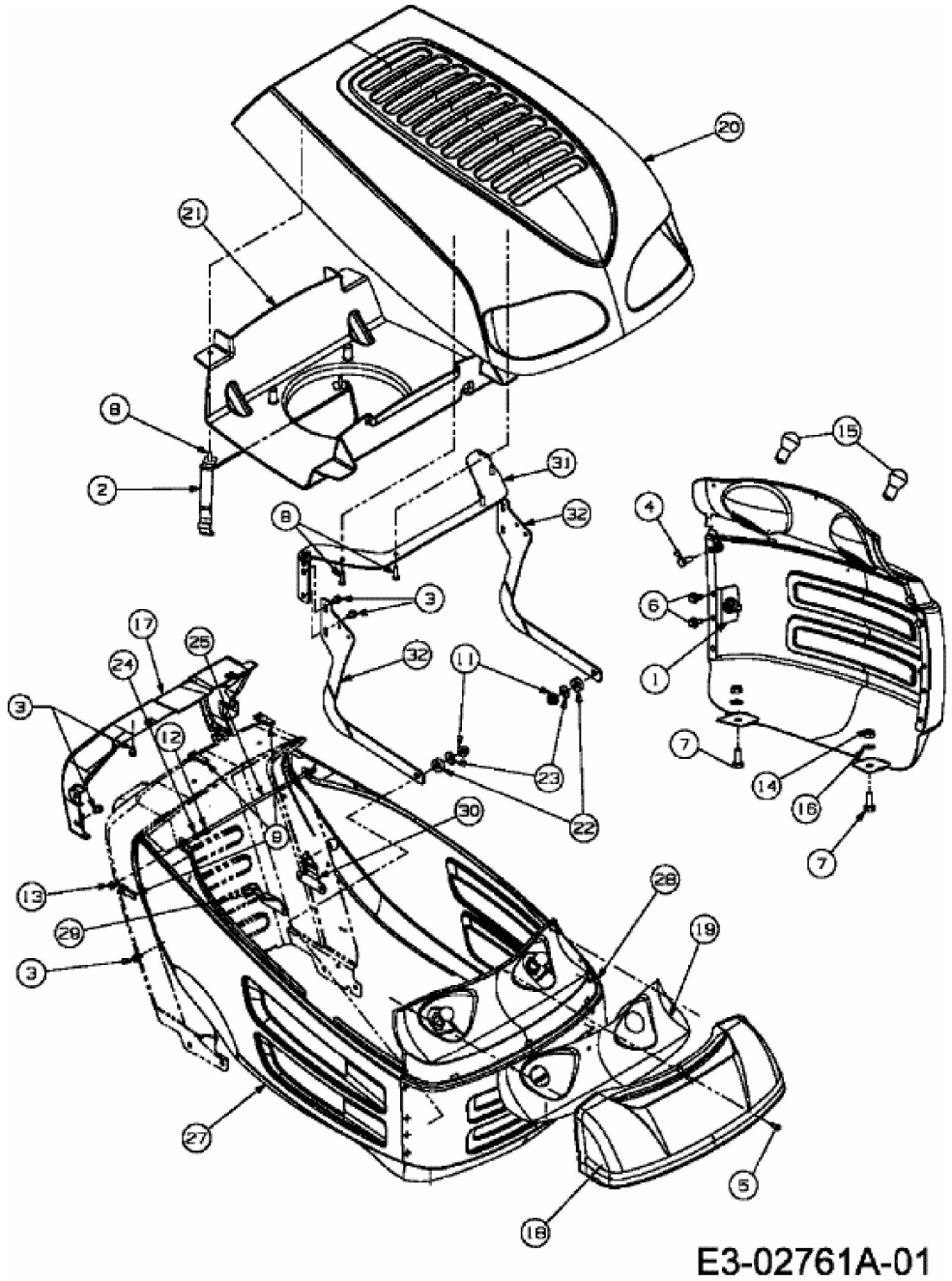RMS 714-96 T > 13AH777F628 (2007) > MOTORHAUBE 7-STYLE