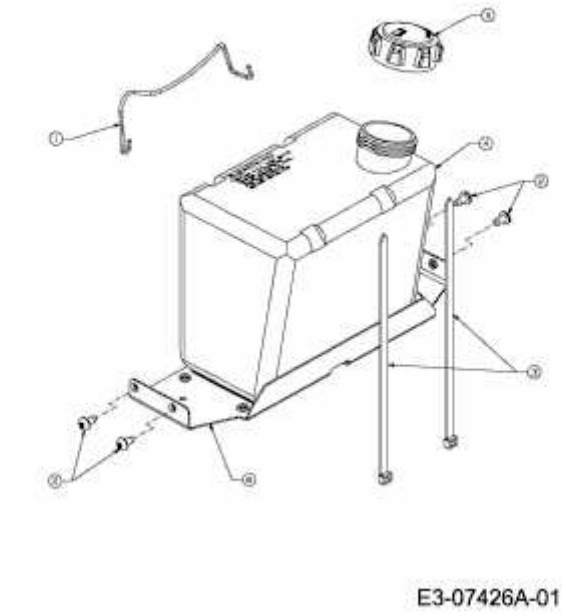GE 130 > 13AH763E607 (2013) > TANK