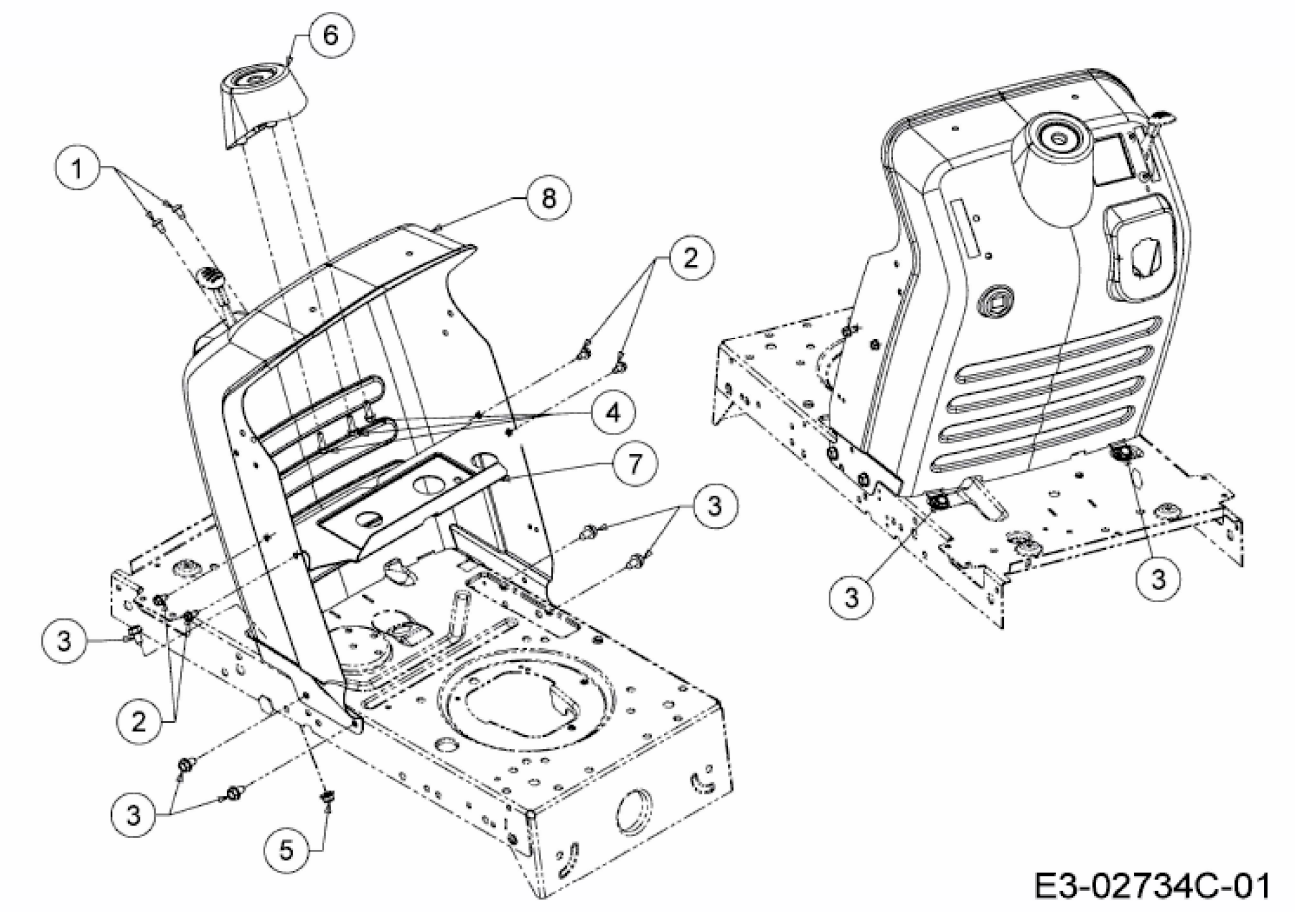RTS 125/96 > 13AH762F685 (2008) > ARMATURENBRETT