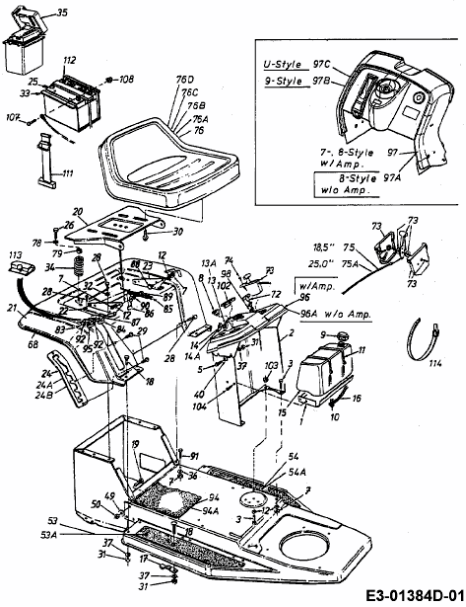Model 450 thru 479