EXPERT 107.180 H > 13AG91WG650 (2012) > MÄHWERK G (42"/107CM)

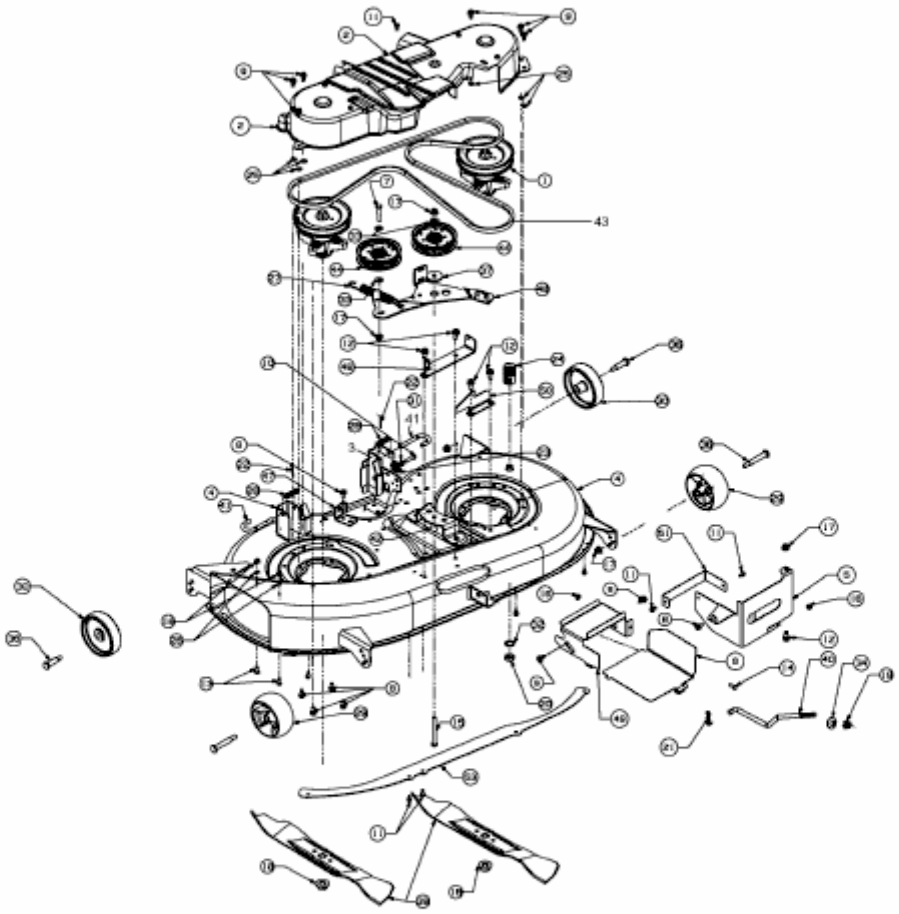

E3-04586D-01