EXPERT 96.160 H > 13AG91WF650 (2012) > VORDERACHSE

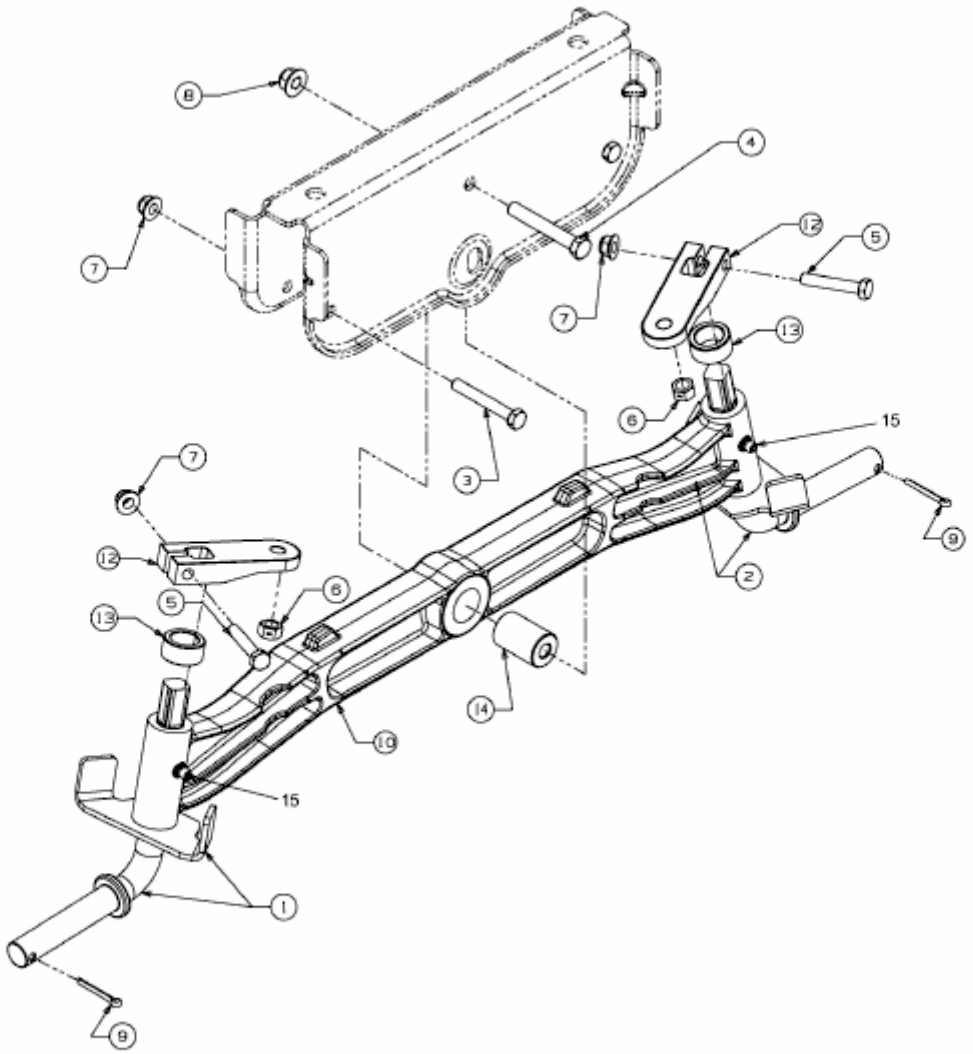

E3-04529C-01