EXPERT 92.160 H > 13AG91WE650 (2012) > HIGH LIFT MESSER

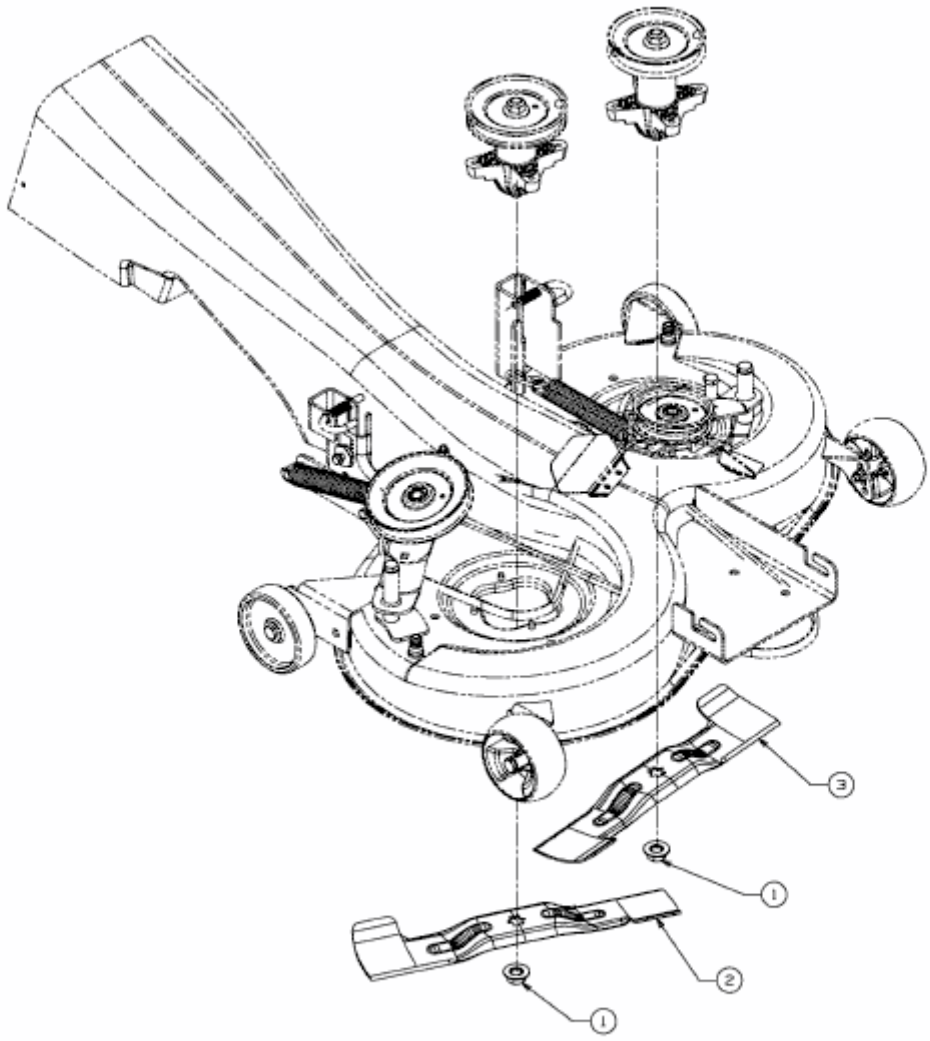

E3-03075A-01