MF 38-16 SD > 13AG91CF695 (2012) > VORDERACHSE

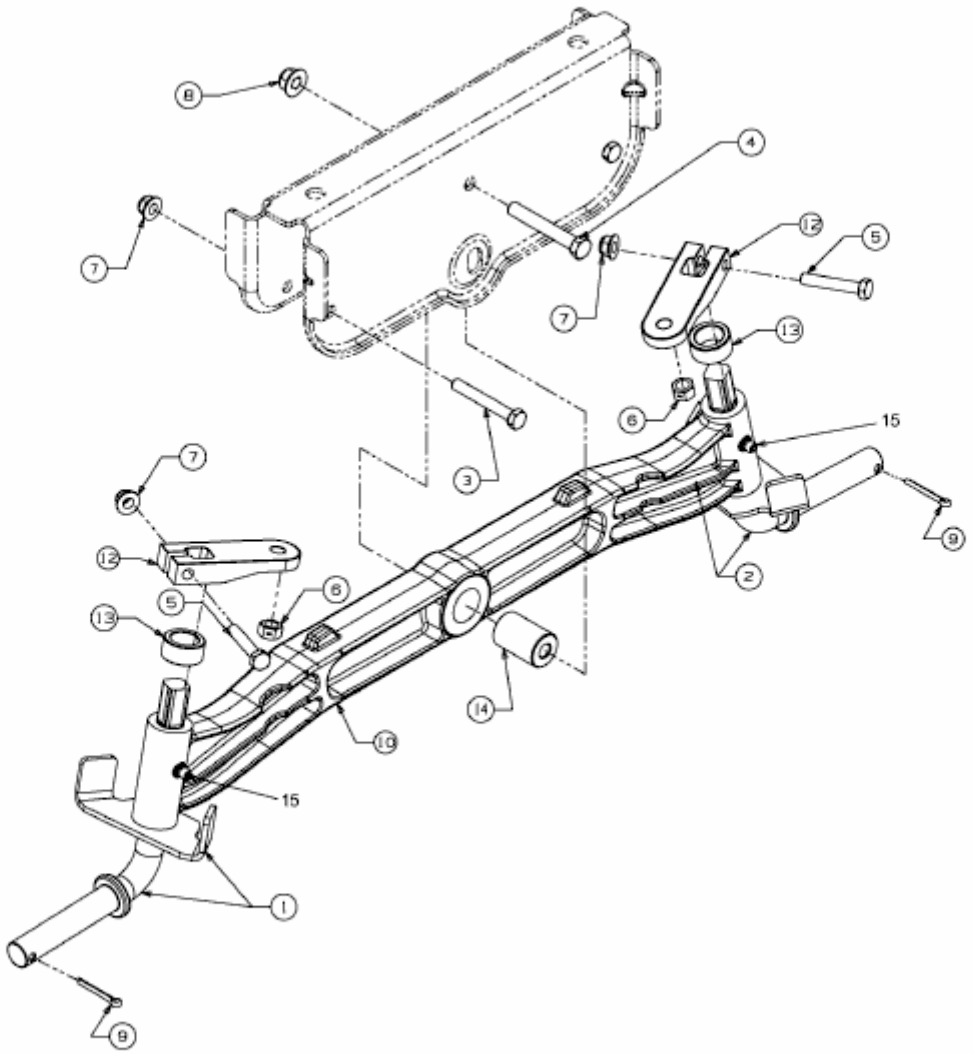

E3-04529C-01