MF 36-16 RD > 13AG91CE695 (2012) > PEDALE

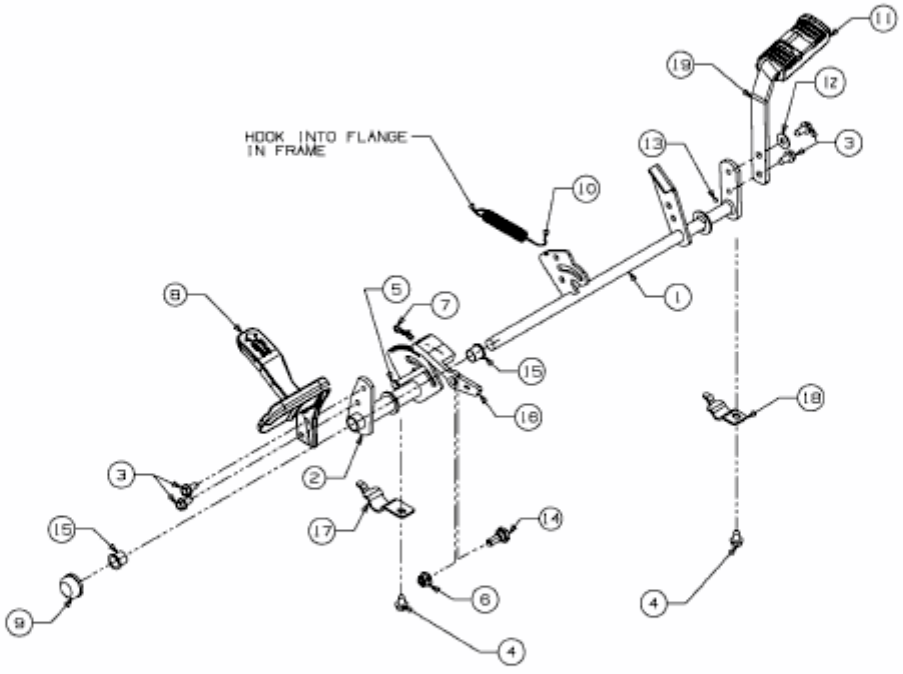

E3-04520D-01