13AG91AG603 (2013) > VORDERACHSE

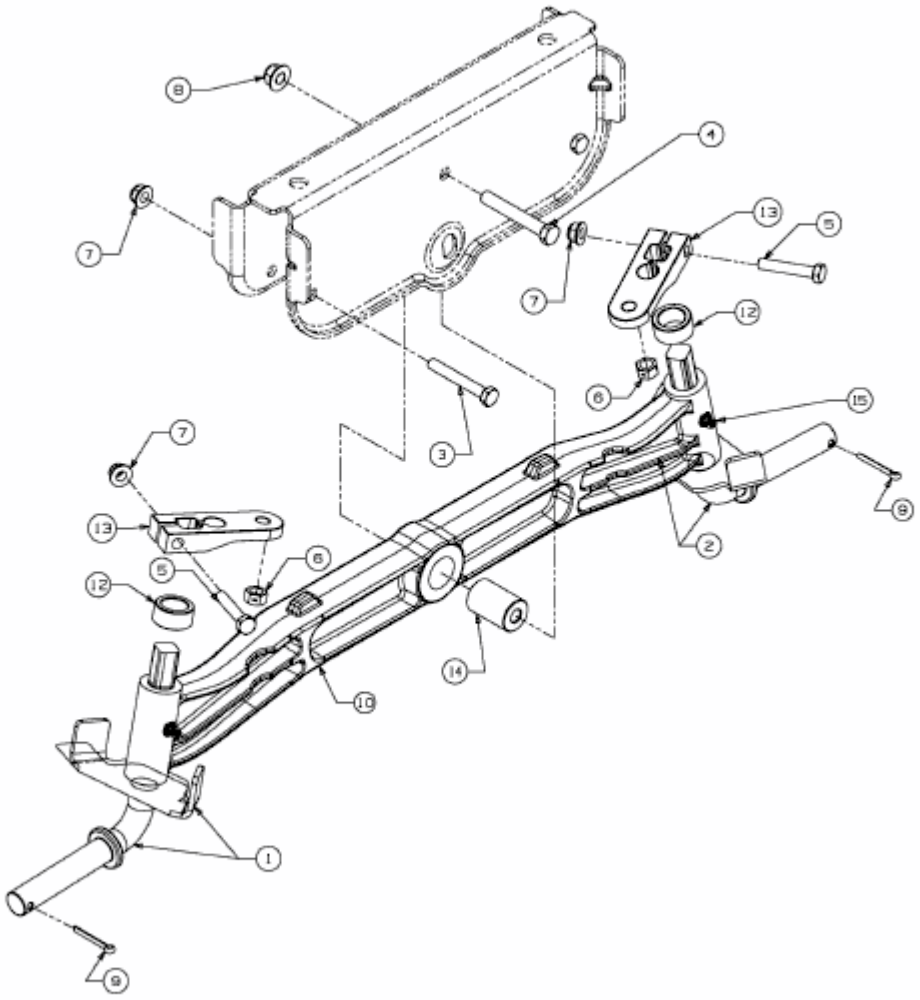

E3-04529D-01