13AG91AE603 (2012) > PEDALE

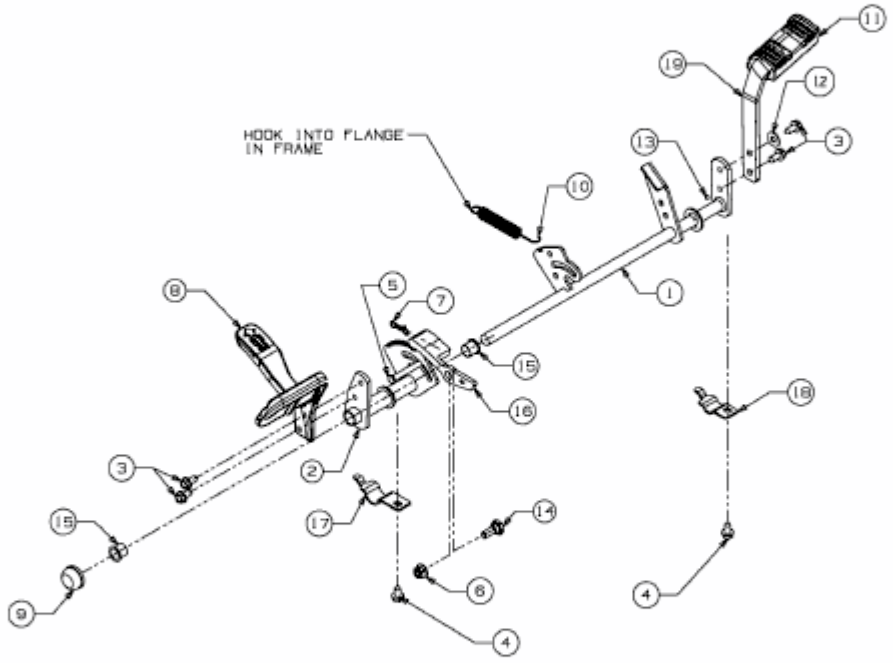

E3-04520D-01