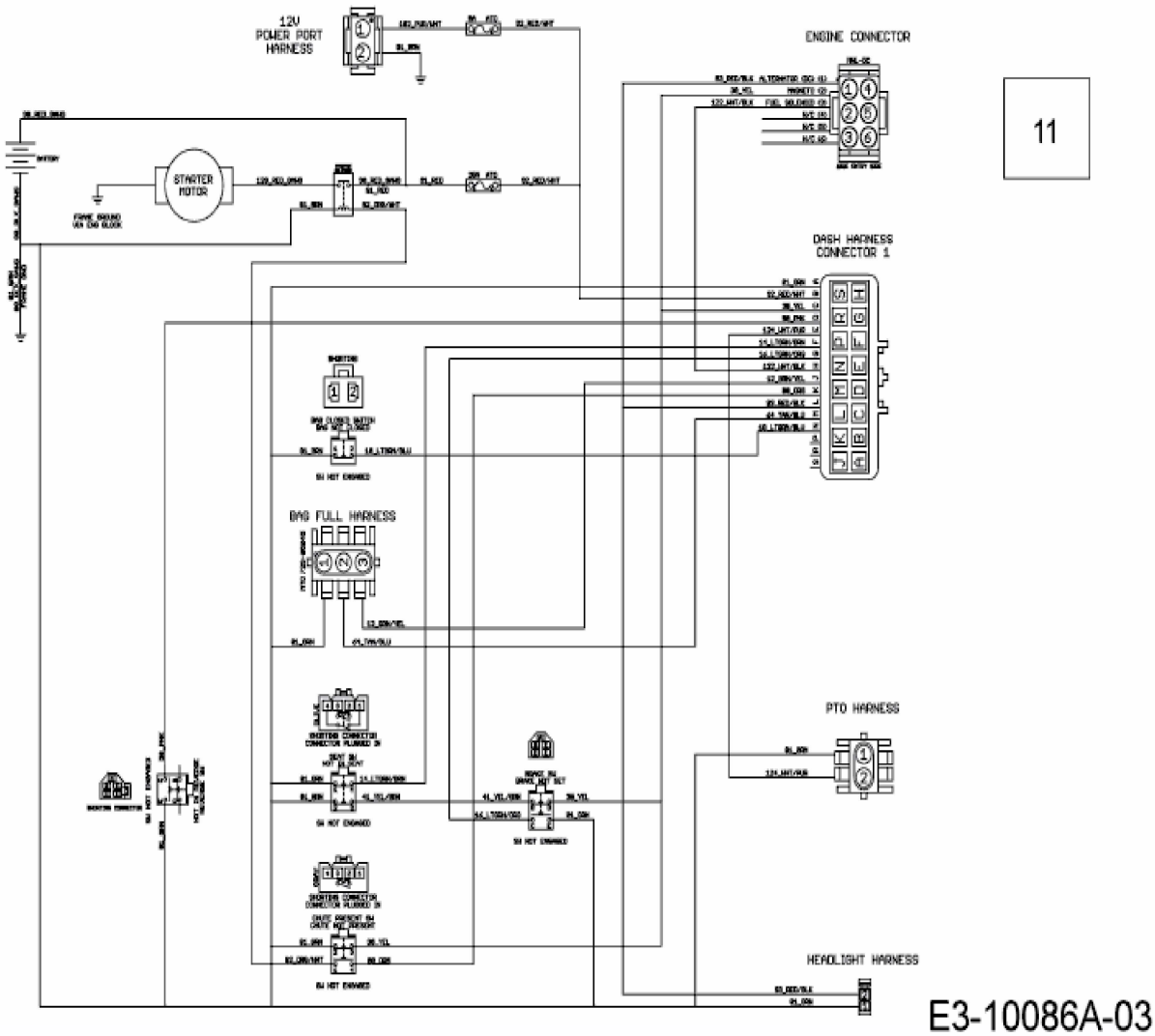
12V
POWER PORT
HARNESS
ENGINE CONNECTOR
STARTER
MOTOR
DASH HARNESS
CONNECTOR 1
BAG FULL HARNESS
PTO HARNESS
HEADLIGHT HARNESS
11
E3-10086A-03