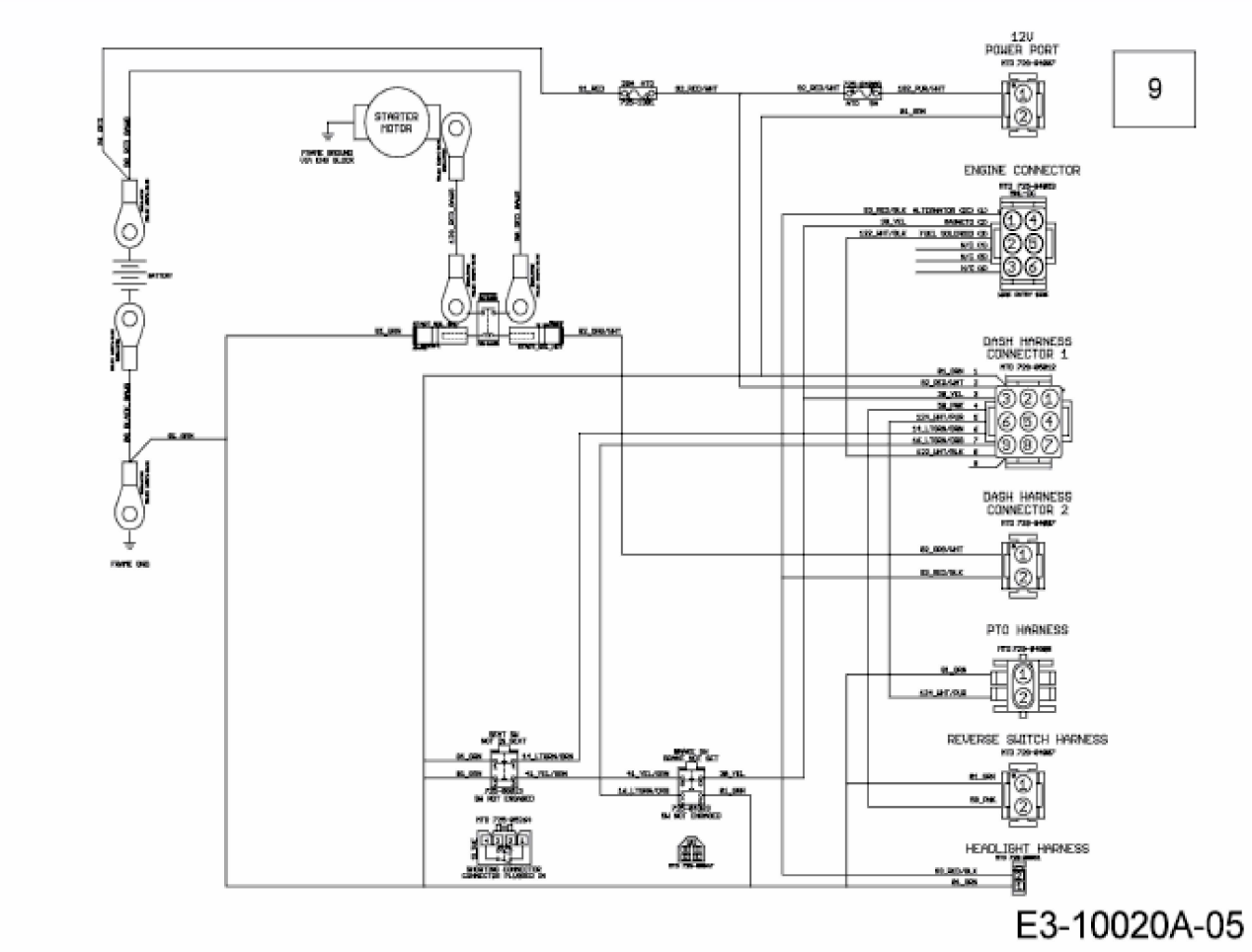
9
12V
POWER PORT
STARTER
MOTOR
ENGINE CONNECTOR
DASH HARNESS
CONNECTOR 1
DASH HARNESS
CONNECTOR 2
PTO HARNESS
REVERSE SWITCH HARNESS
HEADLIGHT HARNESS
E3-10020A-05