CC 1022 KHT > 13AF93AT603 (2014) > VORDERACHSE

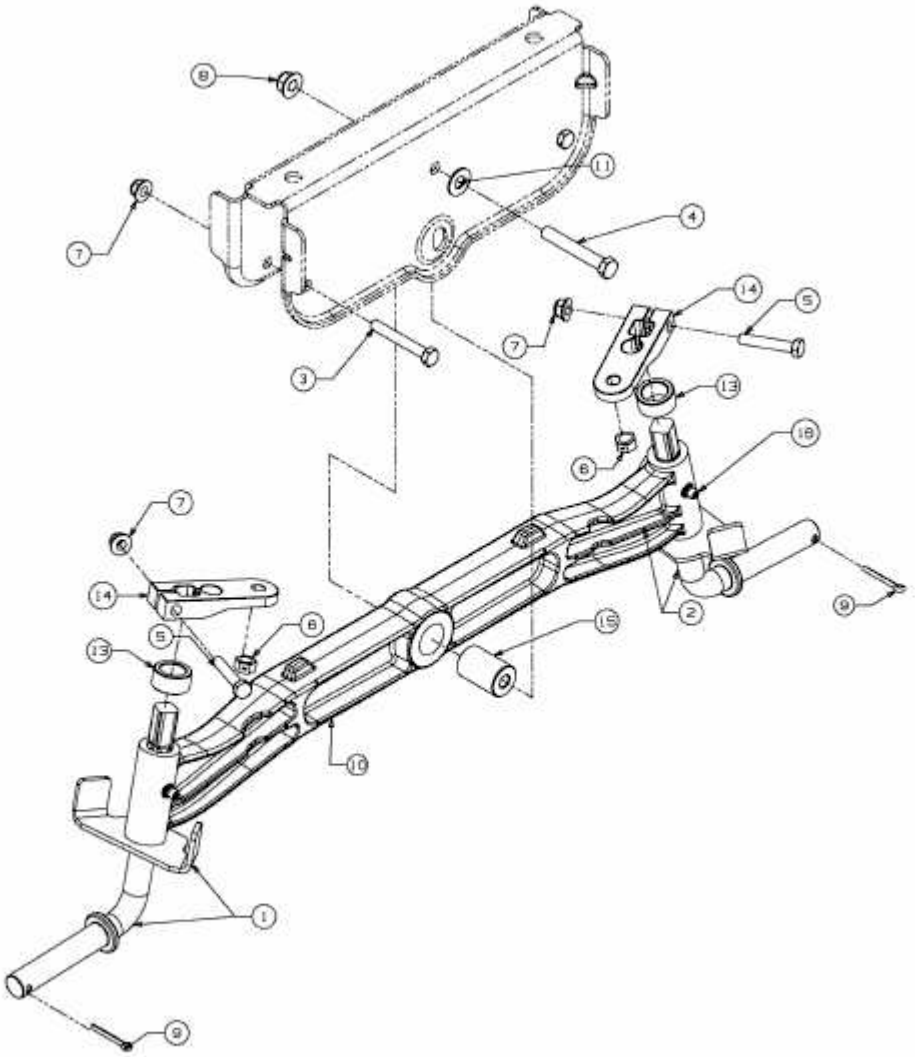

E3-08276B-01