MF 41-22 RD > 13AF91GN695 (2014) > VORDERACHSE

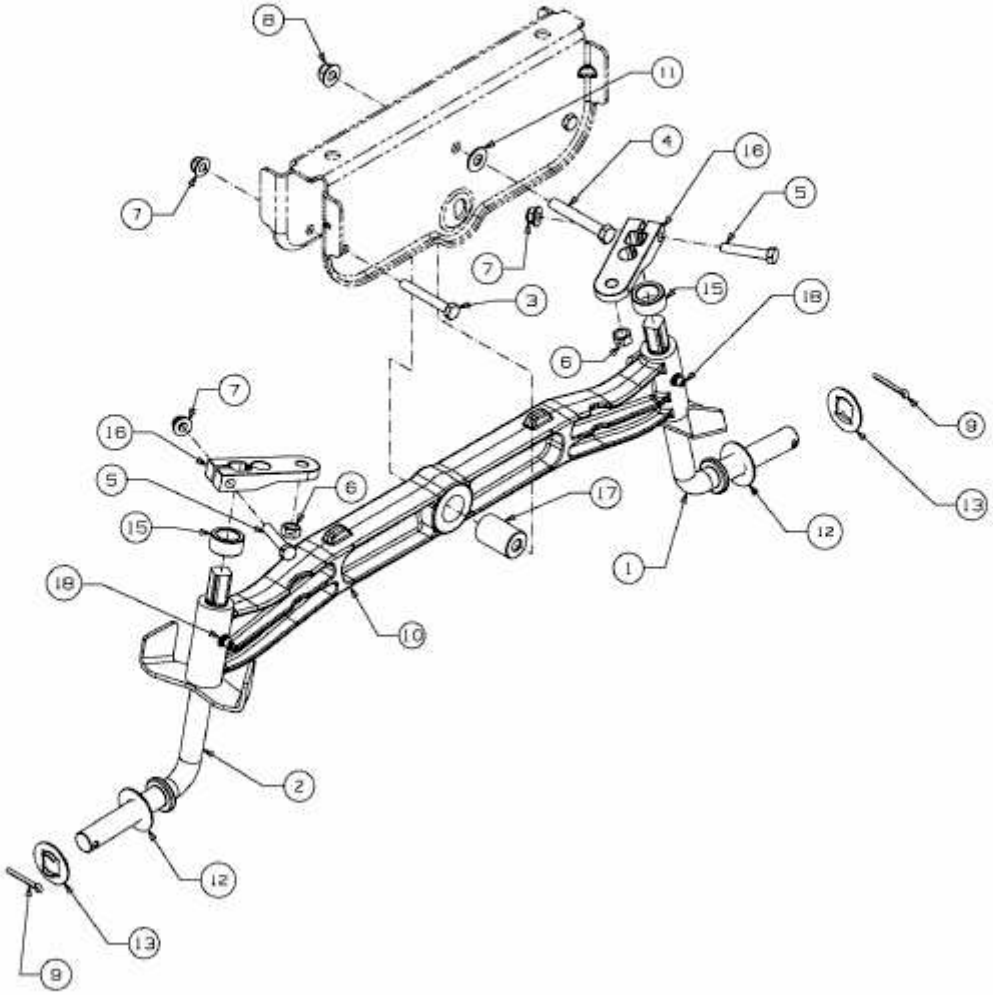

E3-07523C-01