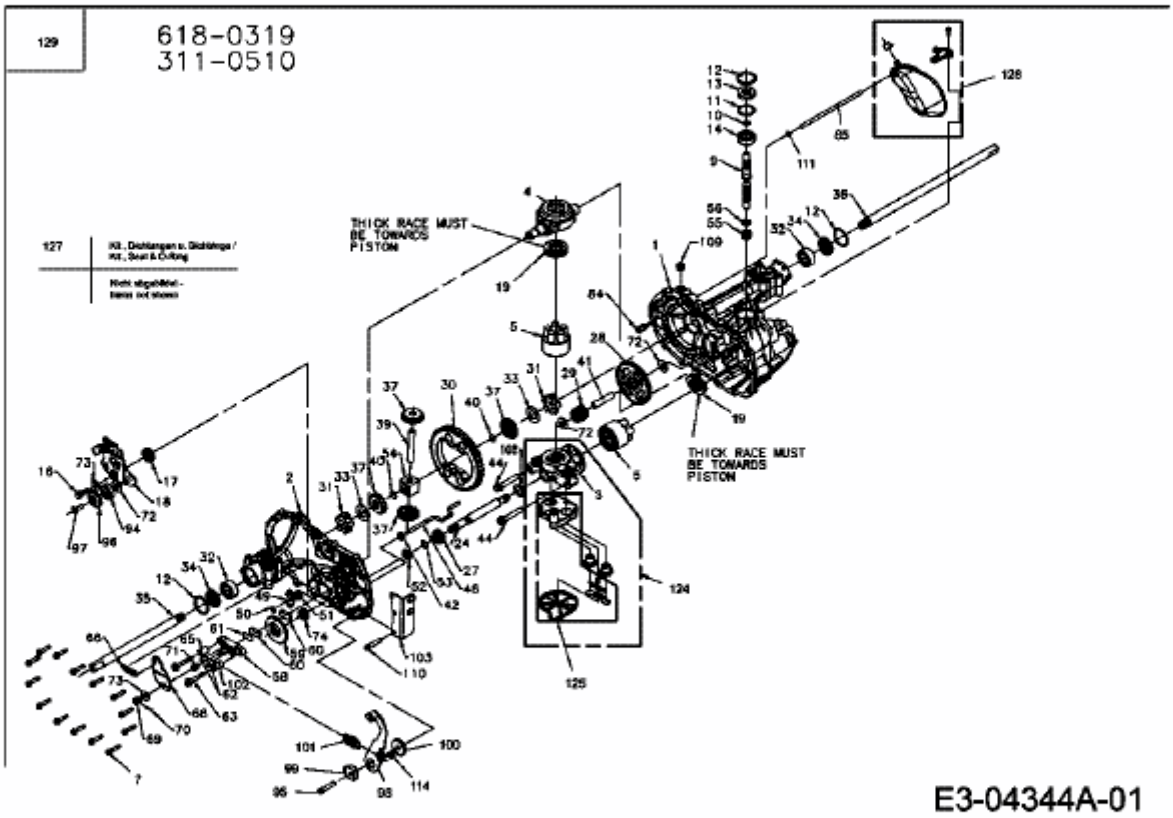MF 42-22 SD > 13AF91CG695 (2009) > HYDROSTAT