MF 42-22 SD > 13AF91CG695 (2009) > VORDERACHSE

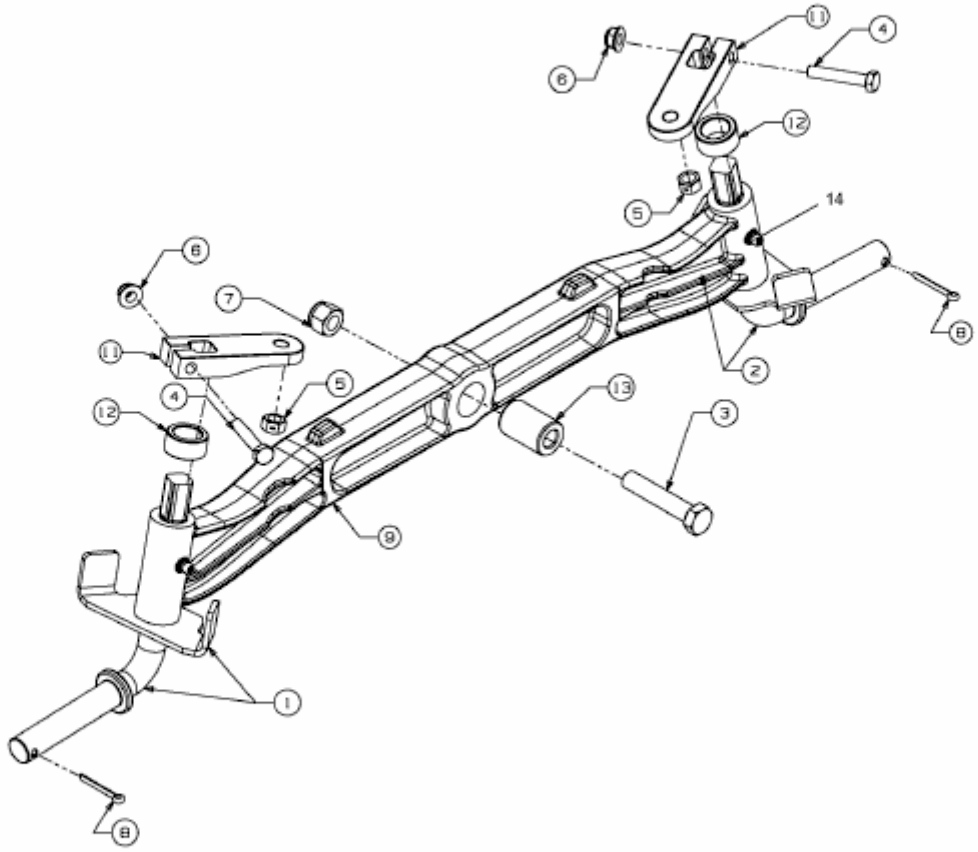

E3-04529A-01