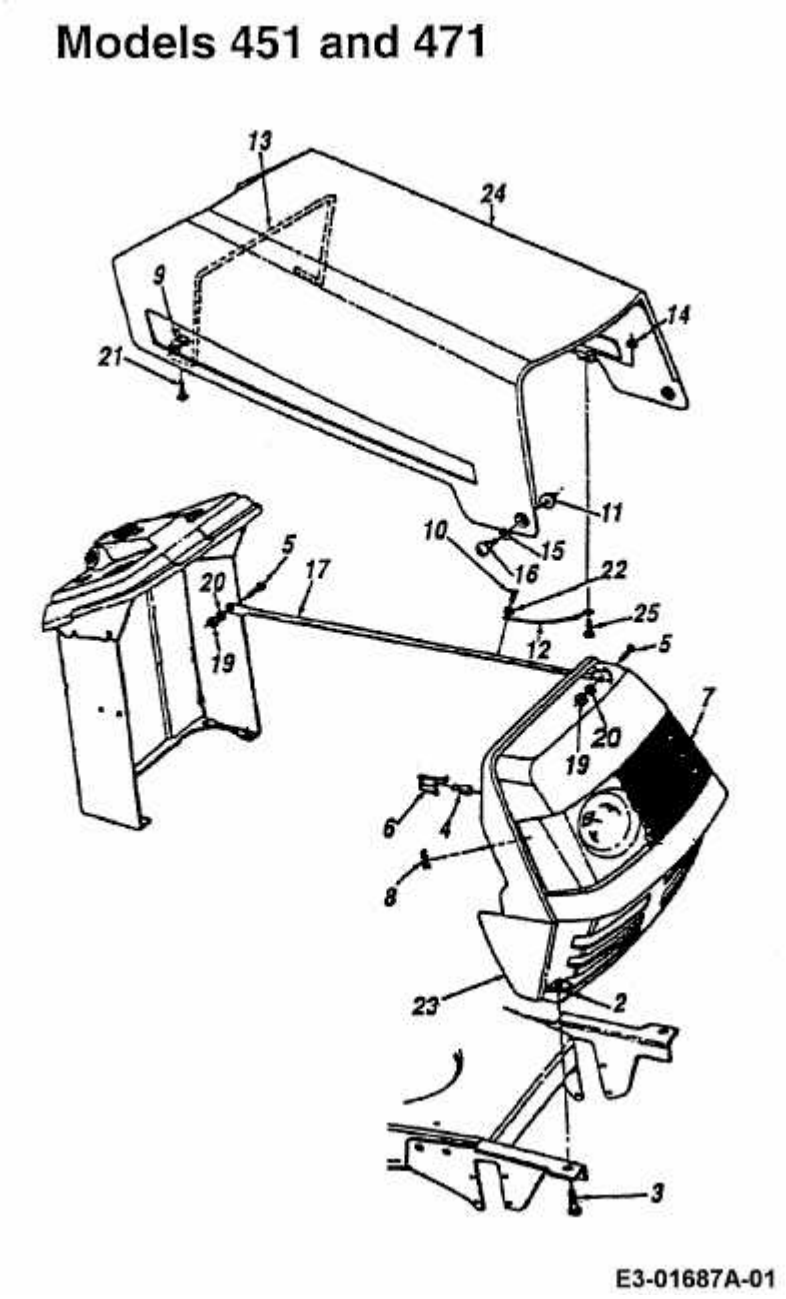B 12 > 13AE451E600 (1998) > MOTORHAUBE 1-STYLE