Style 6
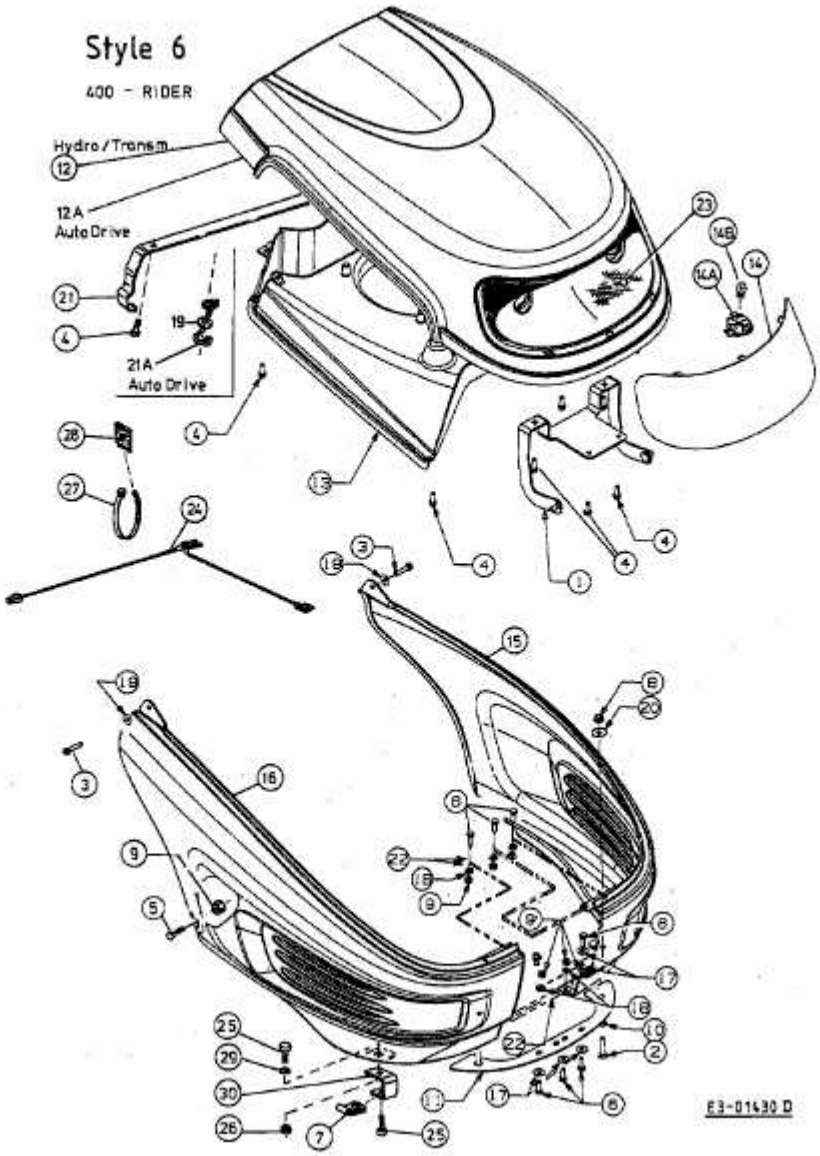
400 - RIDER