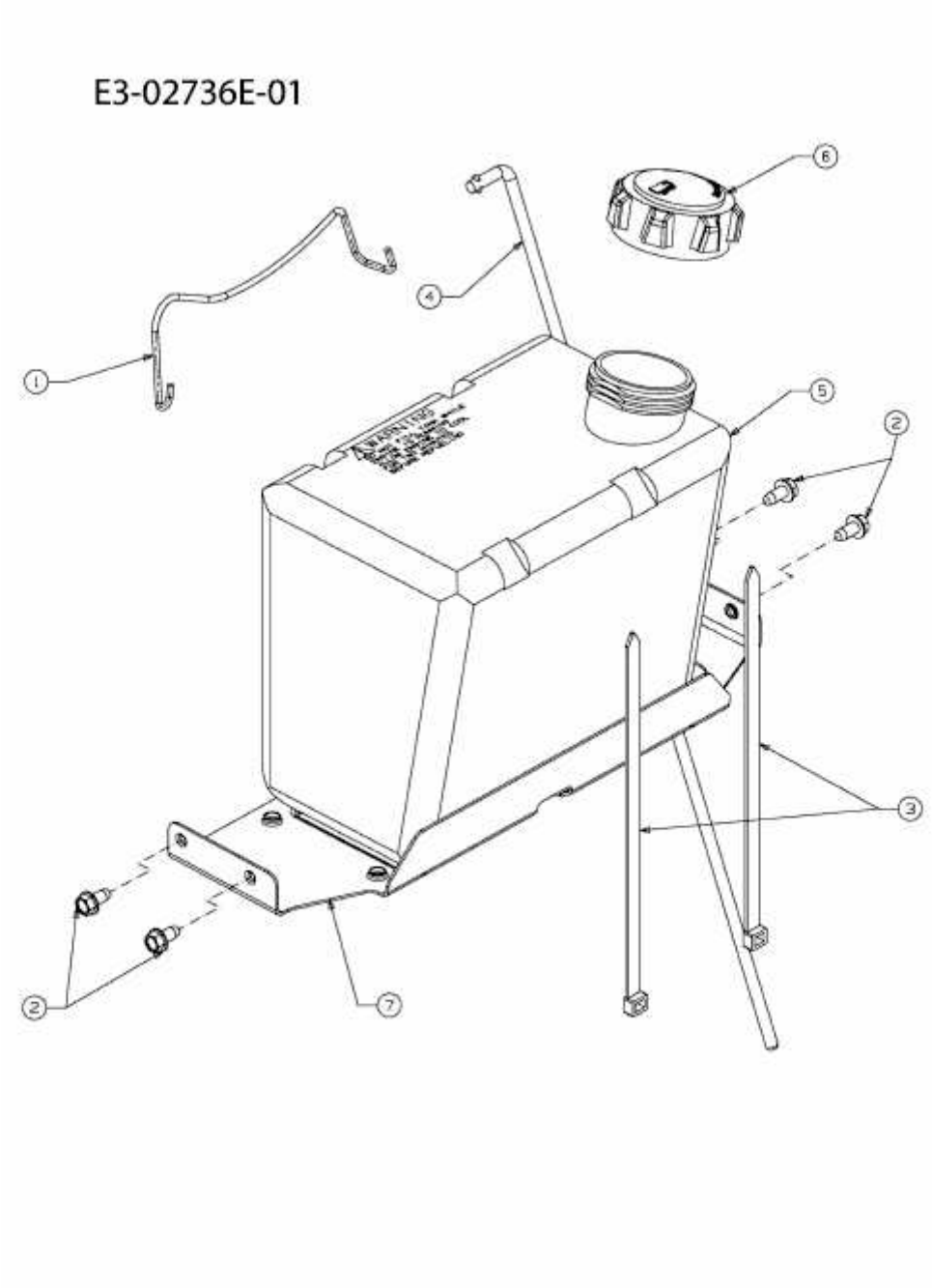HG 7175 > 13AD79YG643 (2010) > BATTERIEHALTER, TANK