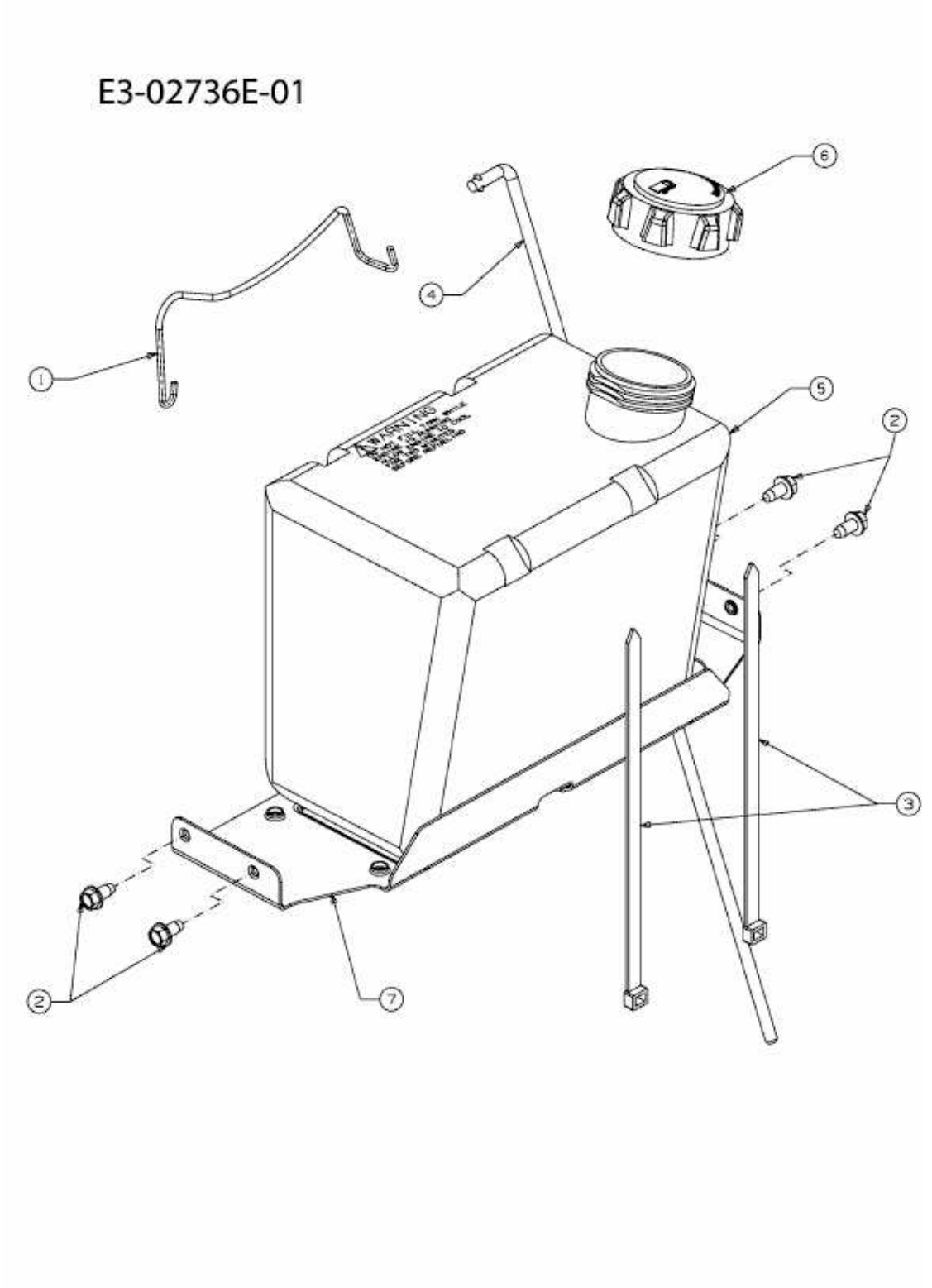JLX 107 SH > 13AD79GG690 (2010) > BATTERIEHALTER, TANK