HN 7160 > 13AD794N643 (1998) > SCHALTPLAN ELEKTROMAGNETKUPPLUNG
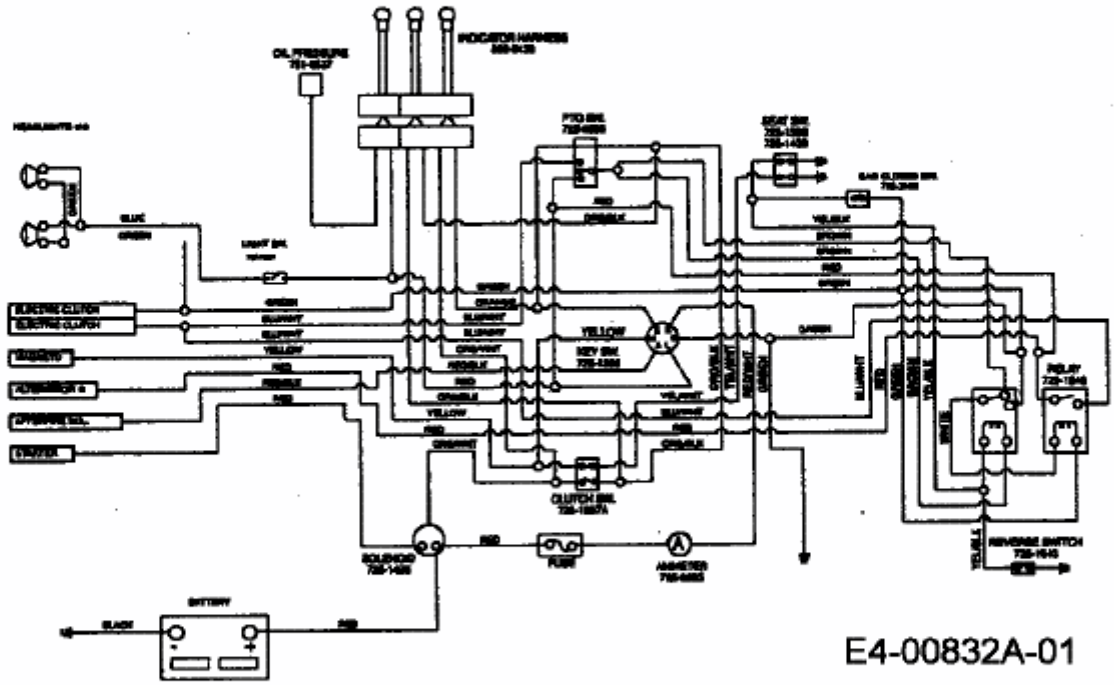
Wire Harness (Electric PTO Only)