155/102 H > 13AD791N659 (1997) > SCHALTPLAN ELEKTROMAGNETKUPPLUNG
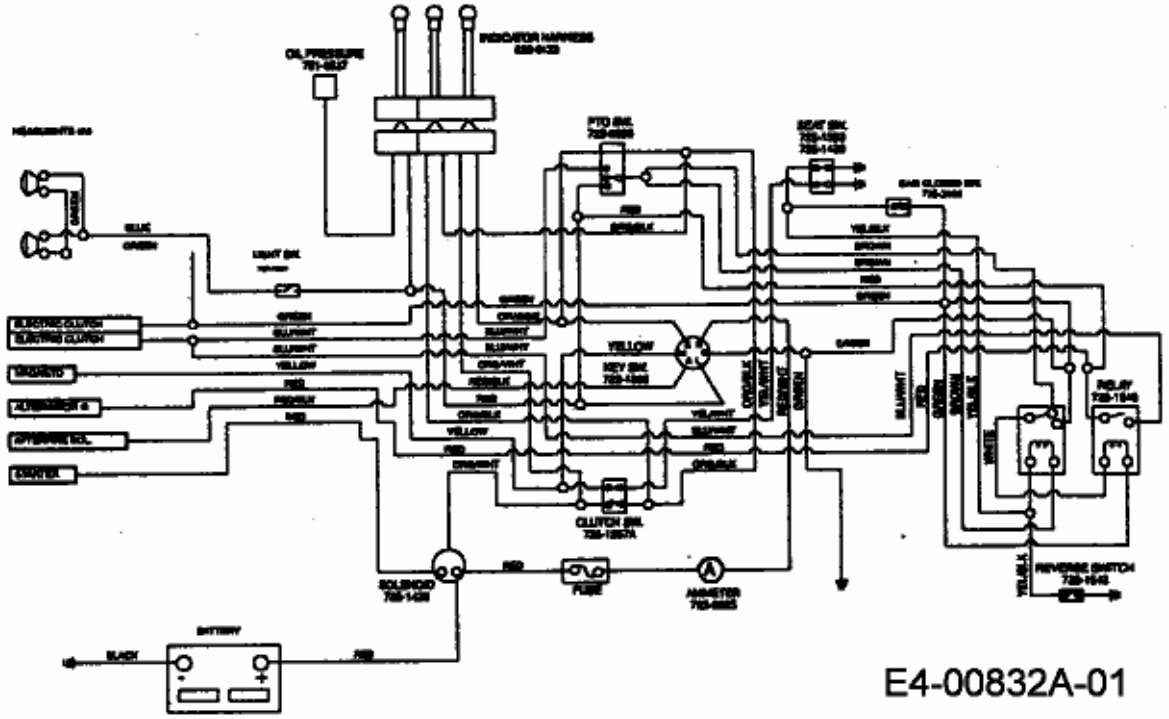
Wire Harness (Electric PTO Only)