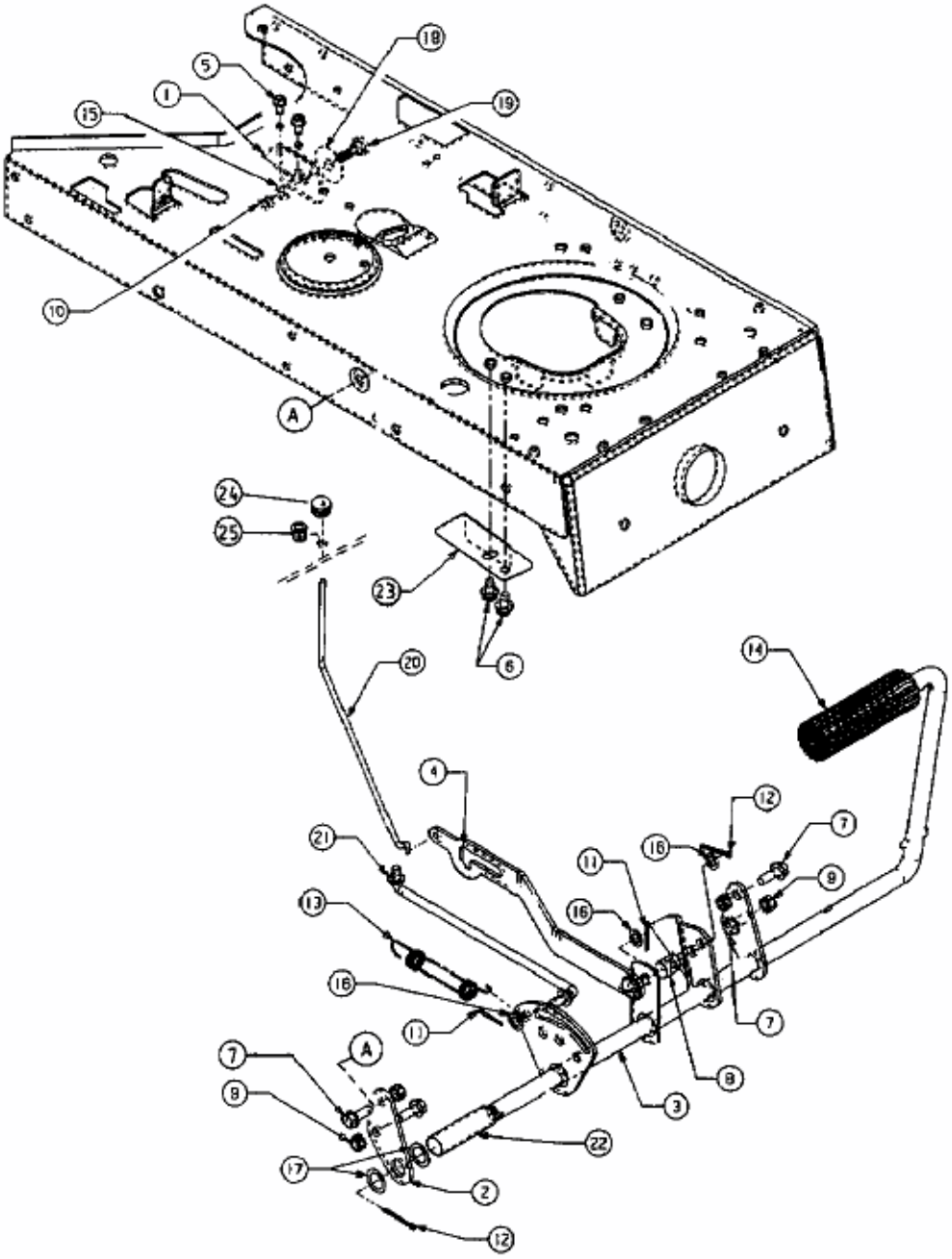155/102 H > 13AD791N659 (1997) > PEDALE