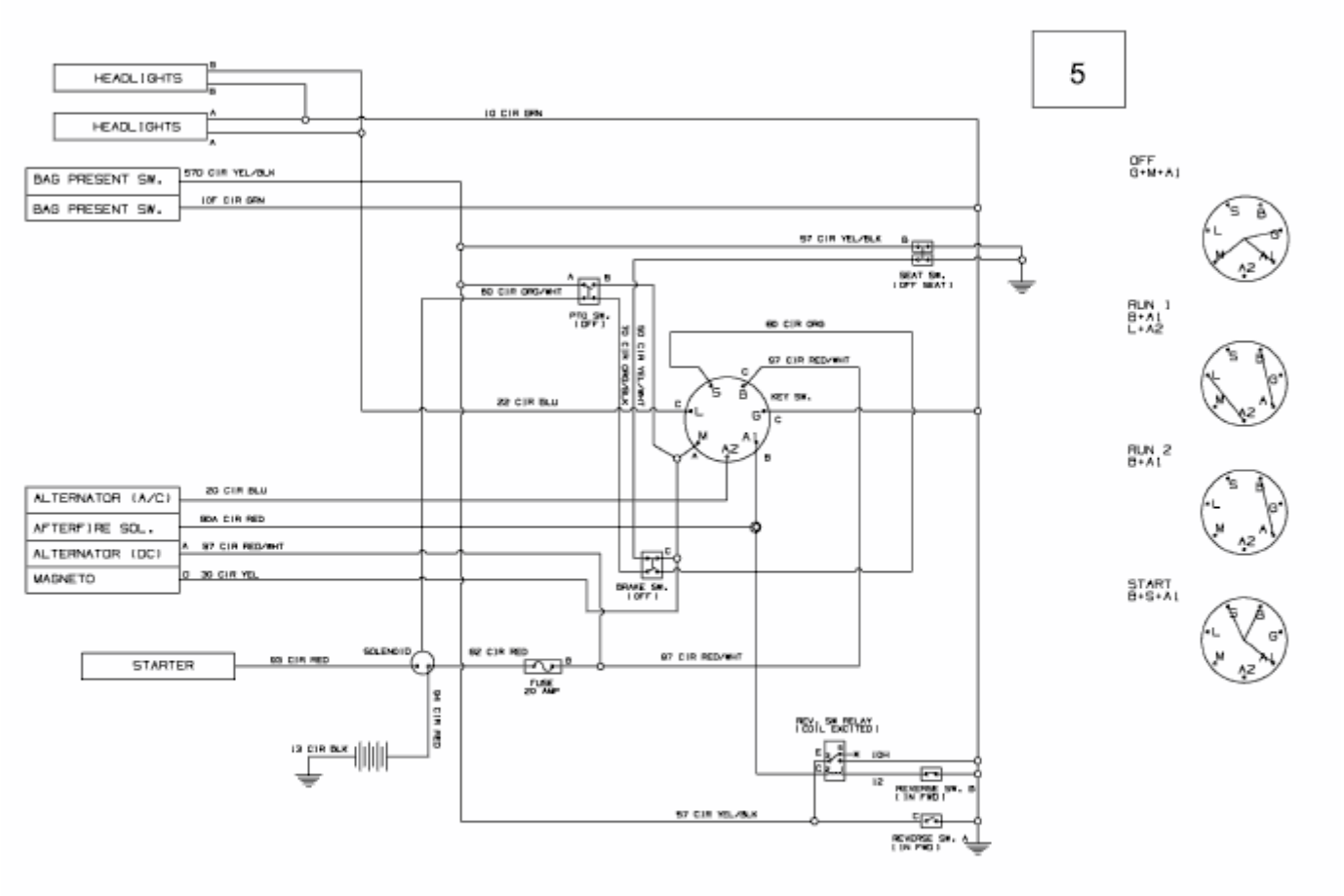
5
HEADLIGHTS
HEADLIGHTS
10 CIR GRN
BAG PRESENT SW.
BAG PRESENT SW.
570 CIR YEL/BLK
10F CIR GRN
57 CIR YEL/BLK
SEAT SW.
(OFF SEAT)
60 CIR ORG/WHT
PTO SW.
(OFF)
60 CIR ORG
97 CIR RED/WHT
KEY SW.
22 CIR BLU
ALTERNATOR (A/C)
AFTERFIRE SOL.
ALTERNATOR (DC)
MAGNETO
20 CIR BLU
90A CIR RED
97 CIR RED/WHT
30 CIR YEL
BRAKE SW.
(OFF)
STARTER
SOLENOID
60 CIR RED
62 CIR RED
FUSE
20 AMP
97 CIR RED/WHT
13 CIR BLK
REV. SW RELAY
(COIL EXCITED)
10H
12
REVERSE SW. B
(IN FWD)
57 CIR YEL/BLK
REVERSE SW. A
(IN FWD)
OFF
G+M+A1
RUN 1
B+A1
L+A2
RUN 2
B+A1
START
B+S+A1

E3-03888D-02