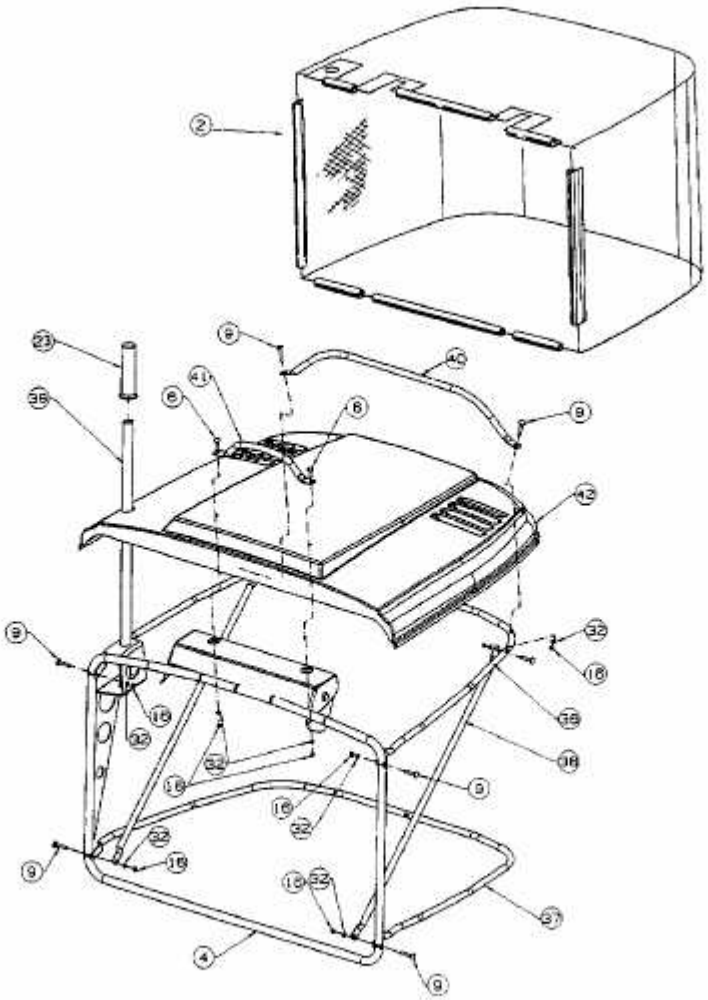SLX 92 RH > 13AD496E690 (1999) > GRASFANGKORB