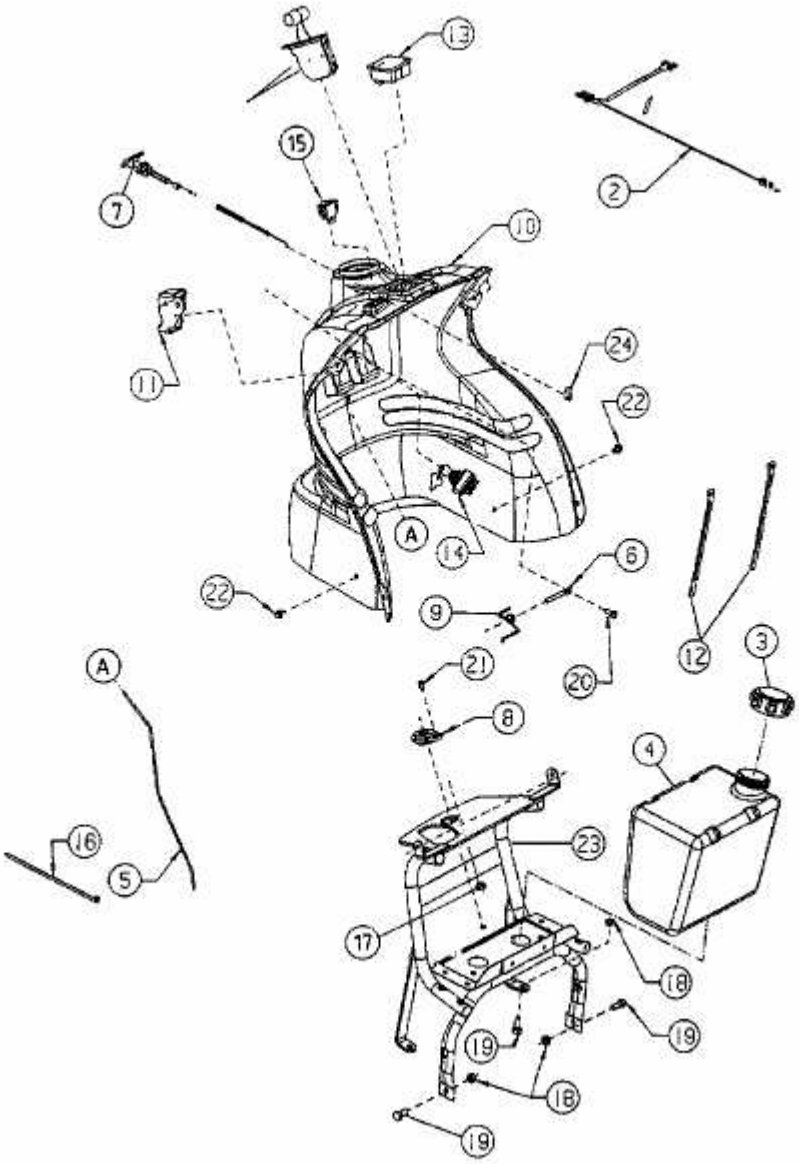SPRINT SLX 92 RH > 13AD416E690 (1999) > ARMATURENBRETT, TANK