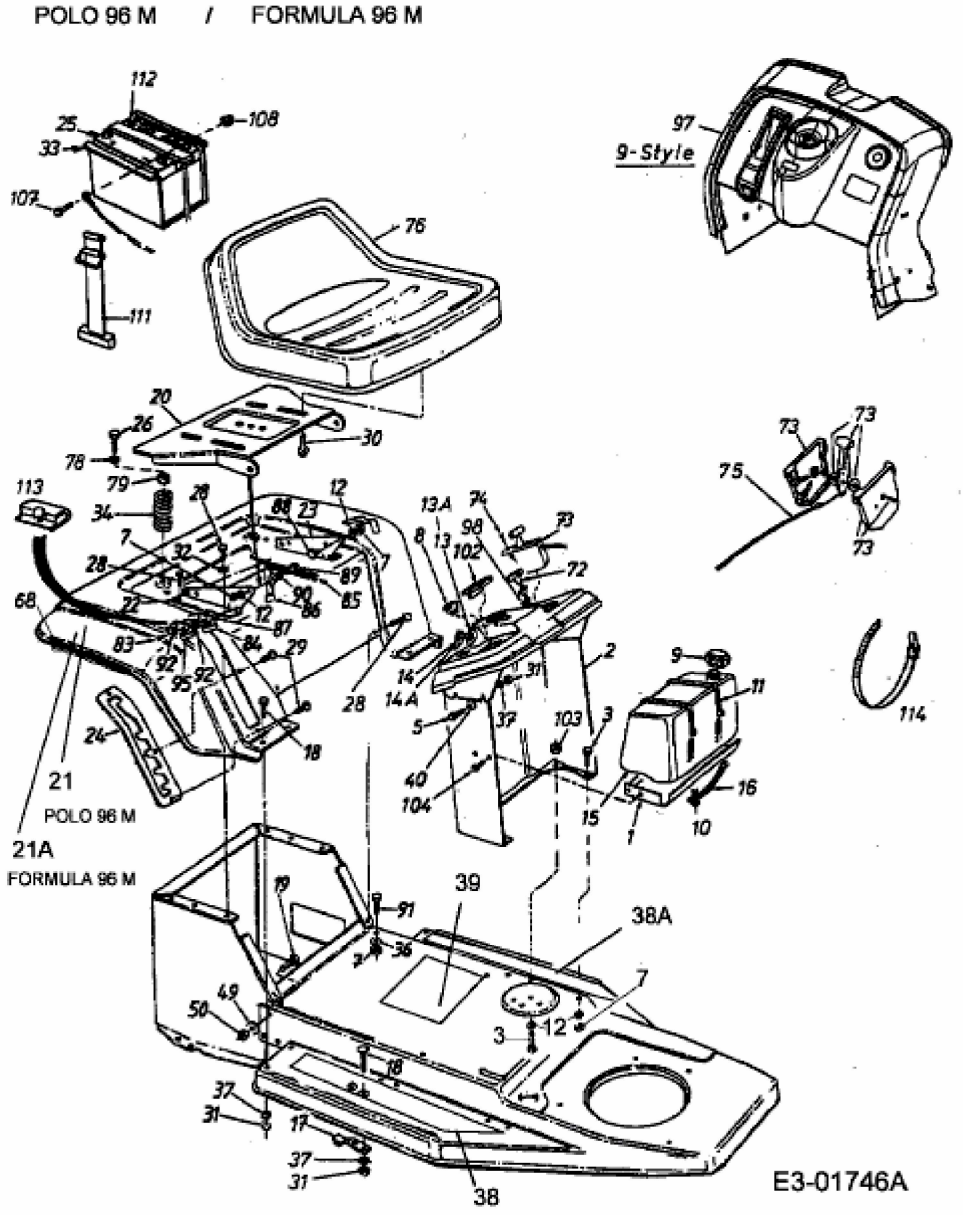
POLO 96 M / FORMULA 96 M
9-Style
21
POLO 96 M
21A
FORMULA 96 M
E3-01746A