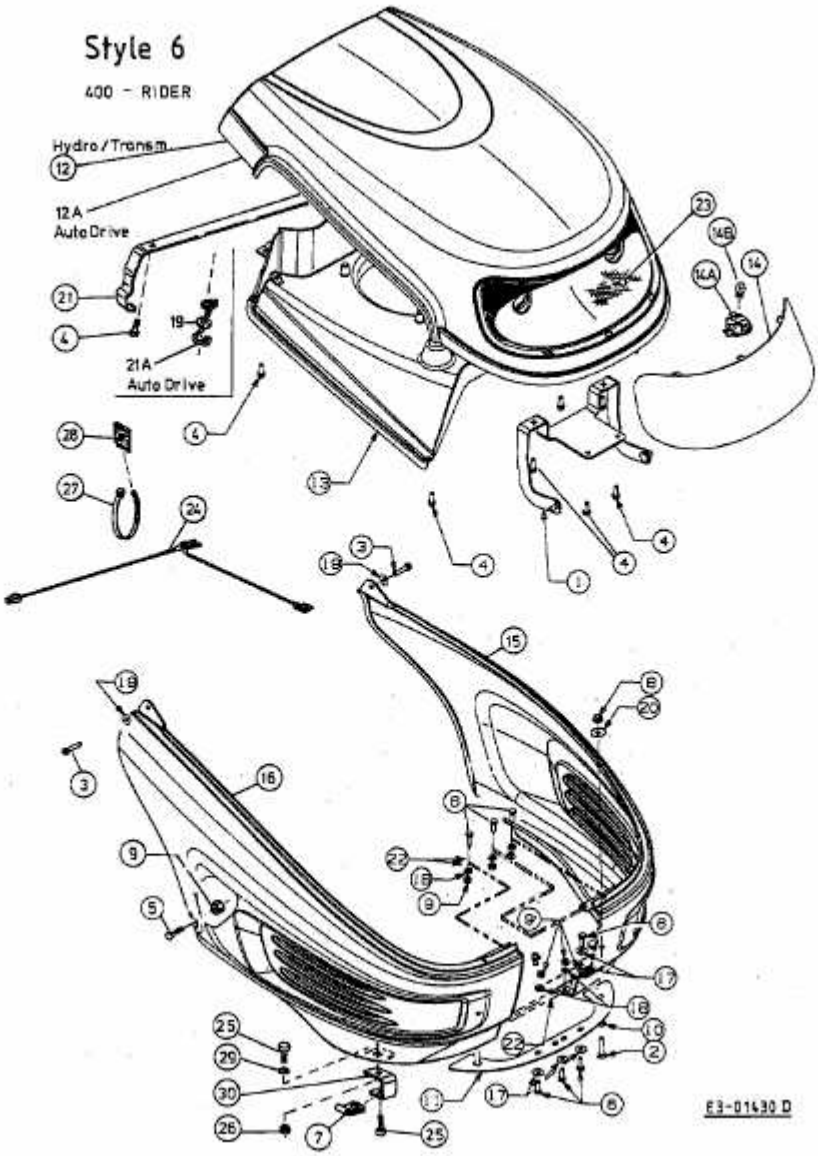SLX 76 R > 13AC476A690 (2002) > MOTORHAUBE 6-STYLE