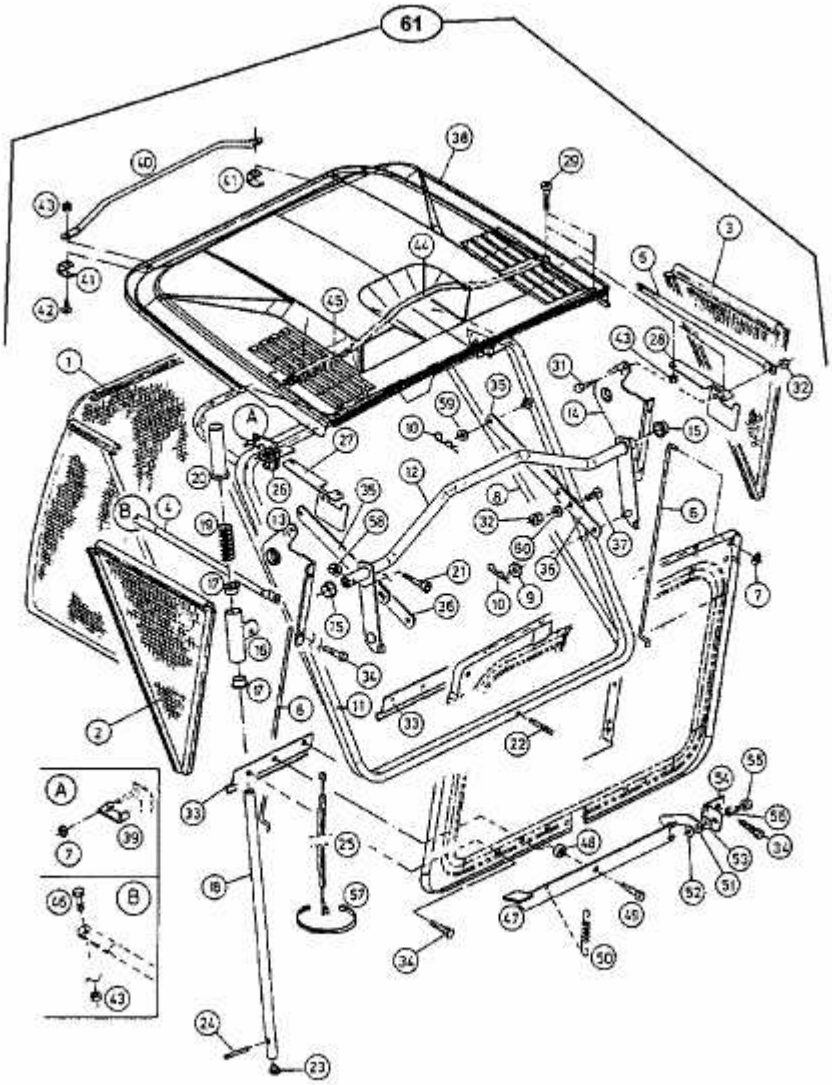SPRINT 2000 > 13AA76GN604 (1998) > GRASFANGKORB