TN 7140 > 13AA764N643 (1997) > KETTENKASTEN

Models 760 thru 769

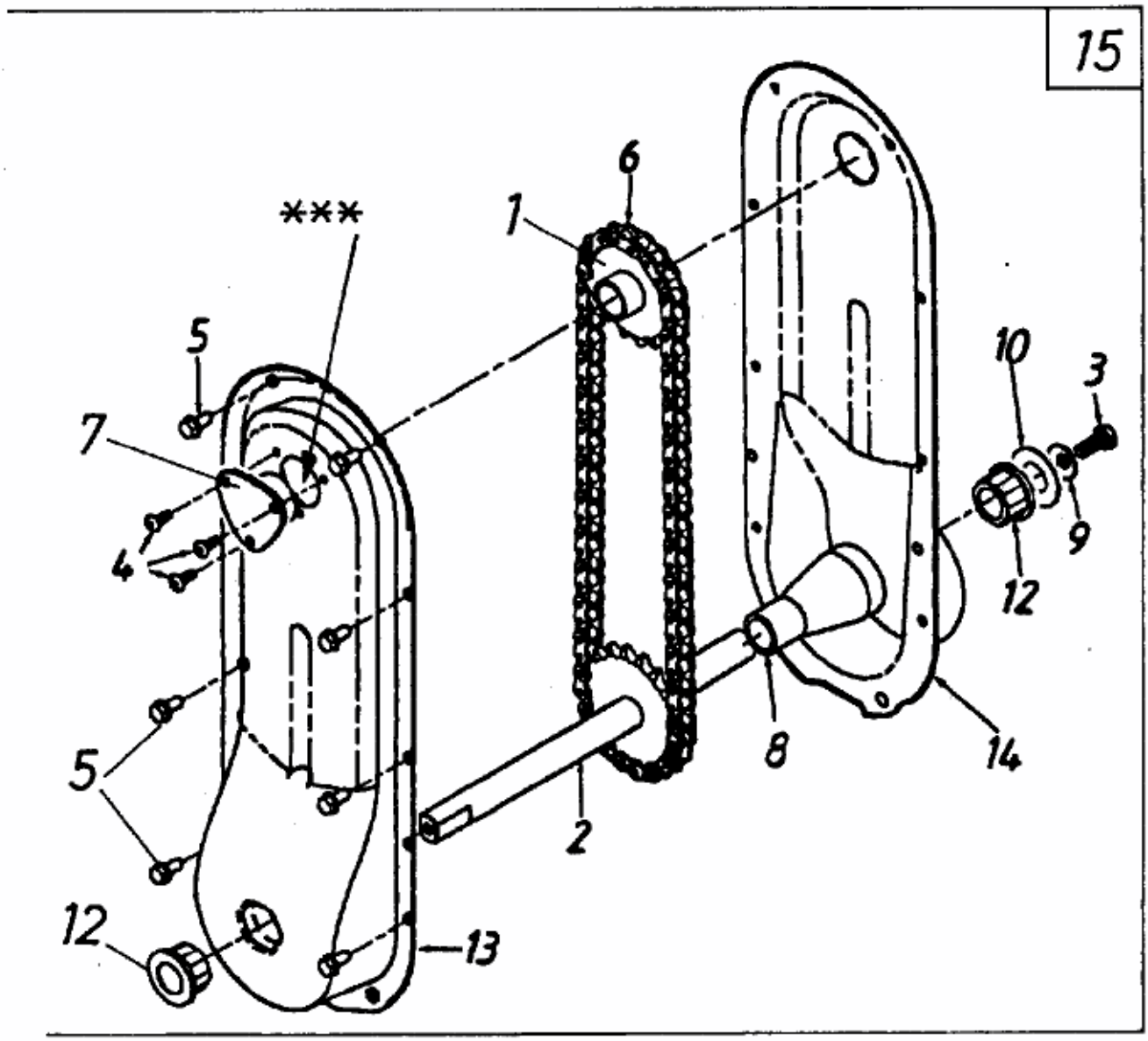

E3-01312 A