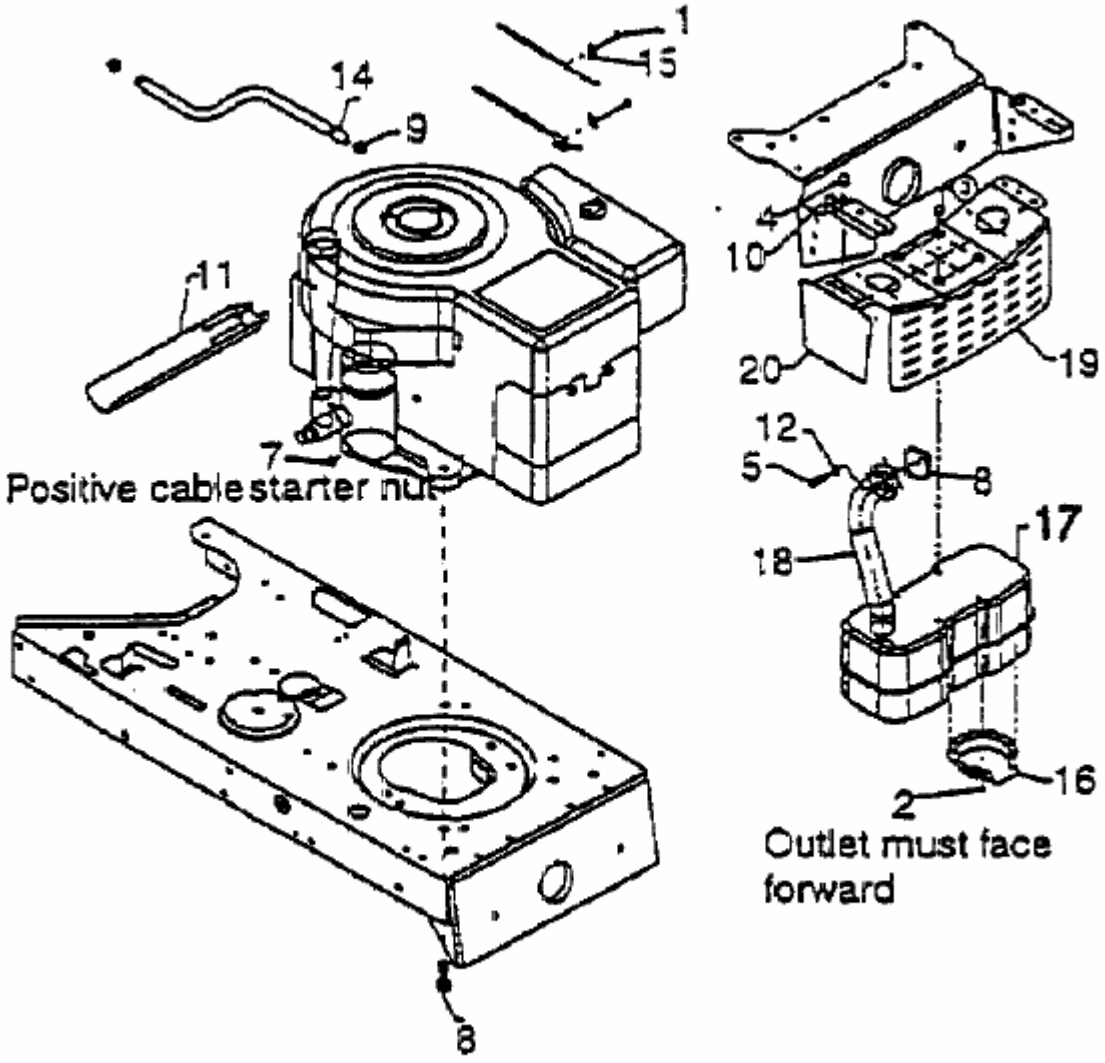
1
15
14
9
11
7
Positive cable starter nut
8
4
10
20
19
12
5
8
17
18
16
2
Outlet must face forward