TWIN CYLINDER
BRIGGS & STRATTON

660 THRU 679

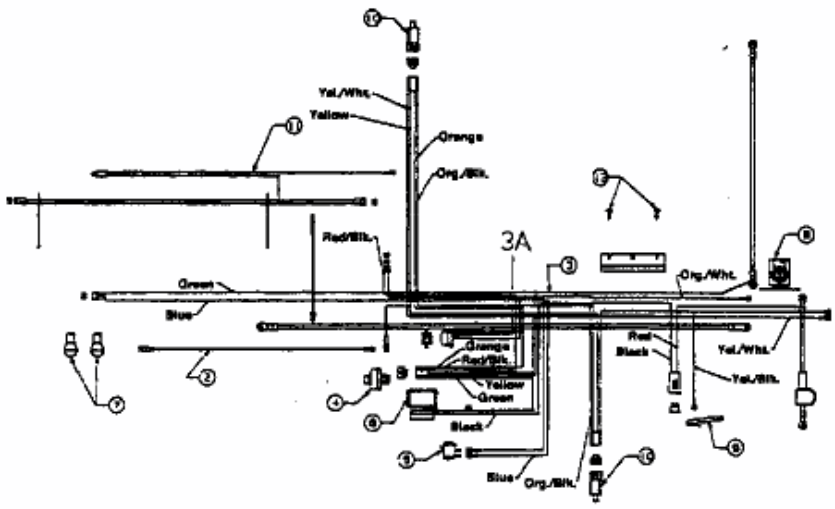

E4-00803 A