RMH 514-105 A > 13AA507N628 (2002) > PEDALE

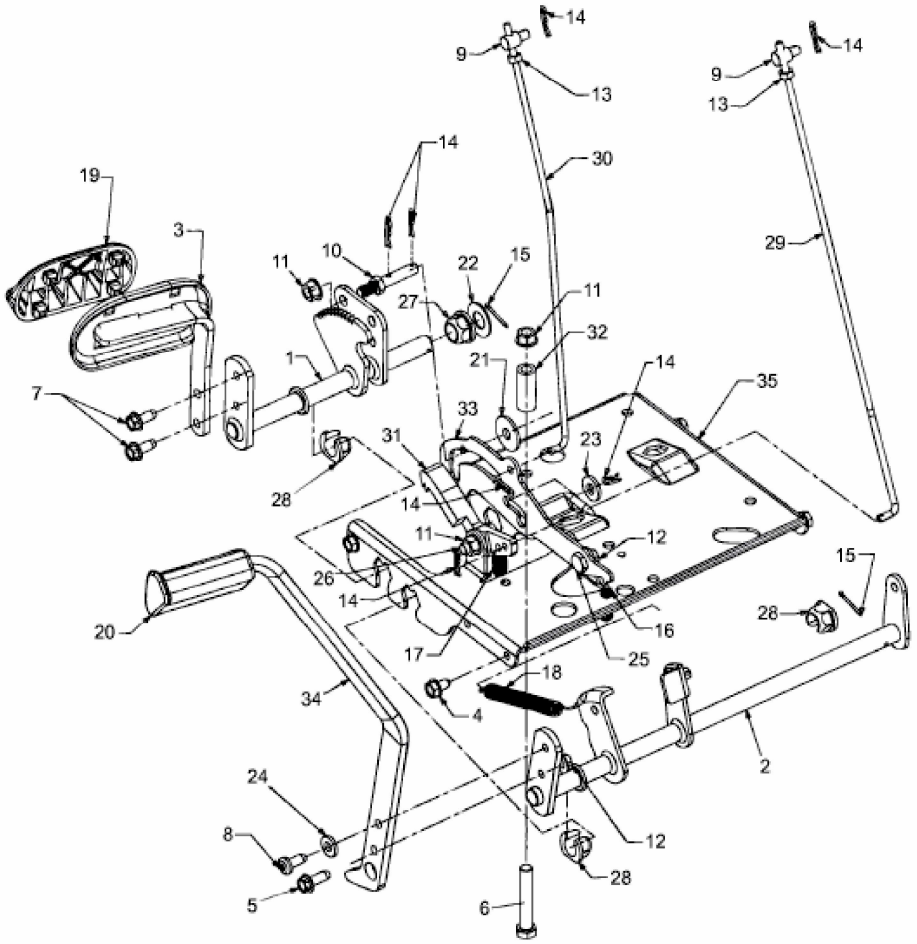

E3-01654B-01