RMH 514-92 A > 13AA507E628 (2002) > PEDALE

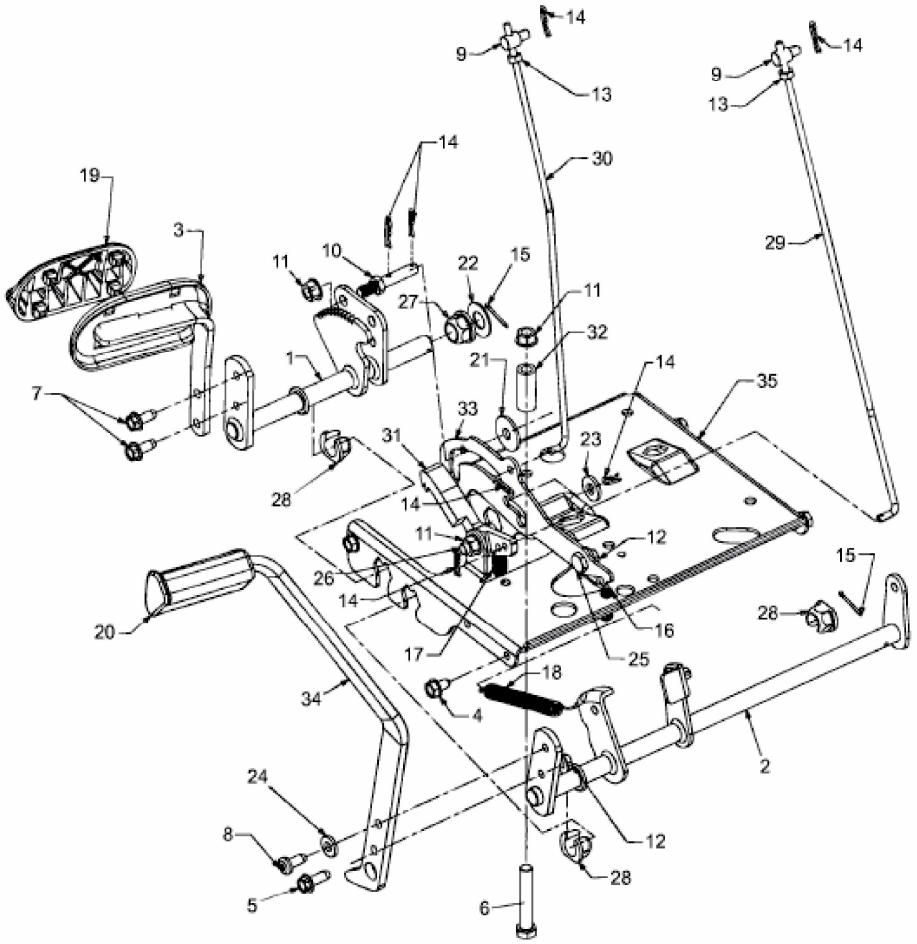

E3-01654B-01