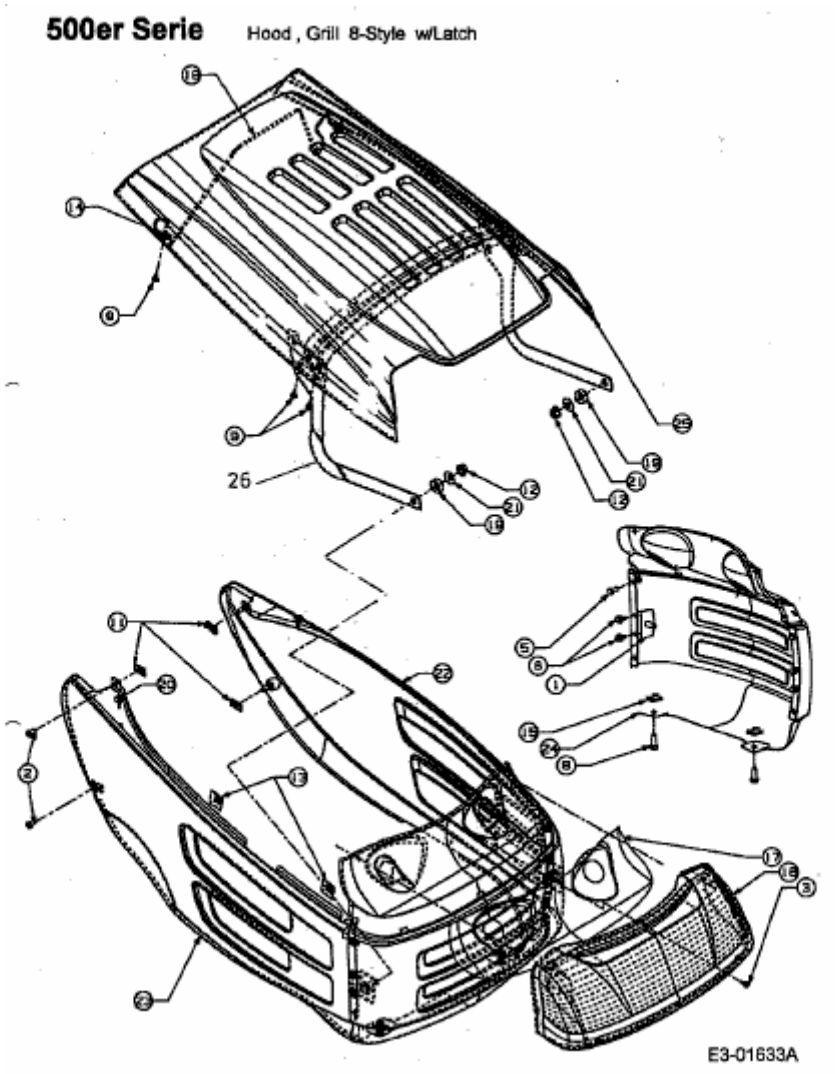RH 150/92 B > 13AA488E676 (2004) > MOTORHAUBE 8-STYLE