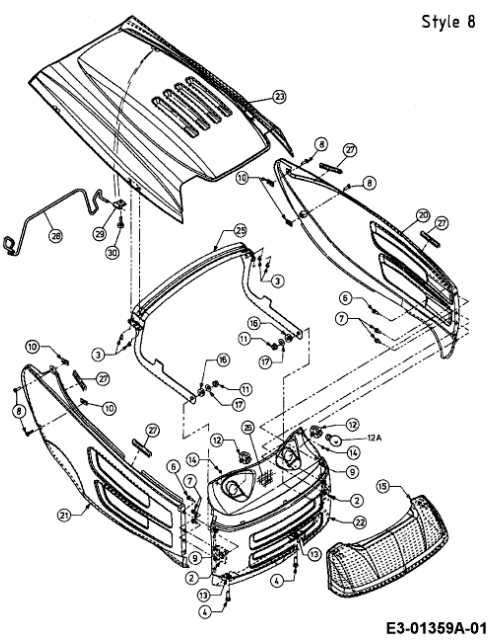B/130 > 13AA478F678 (2002) > MOTORHAUBE 8-STYLE