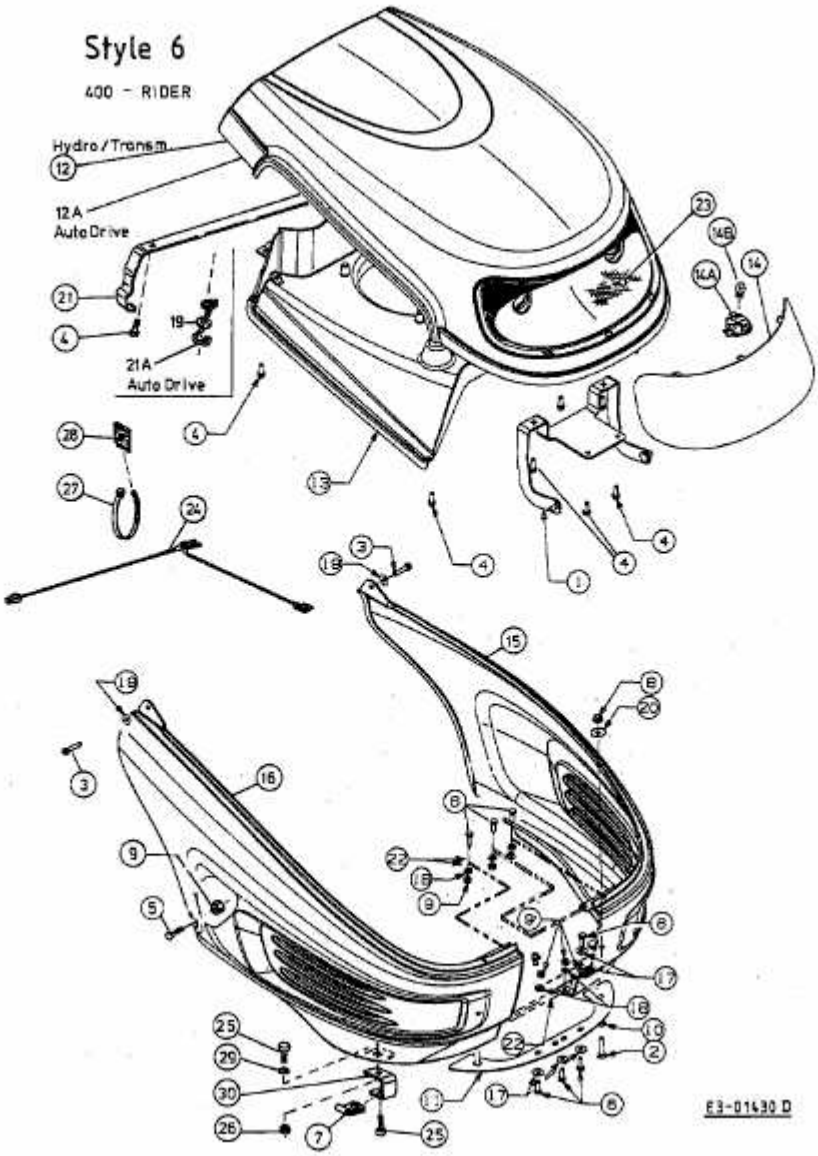SLX 76 R > 13AA476A690 (2001) > MOTORHAUBE 6-STYLE