SLX 76 R > 13AA476A690 (2001) > ARMATURENBRETT
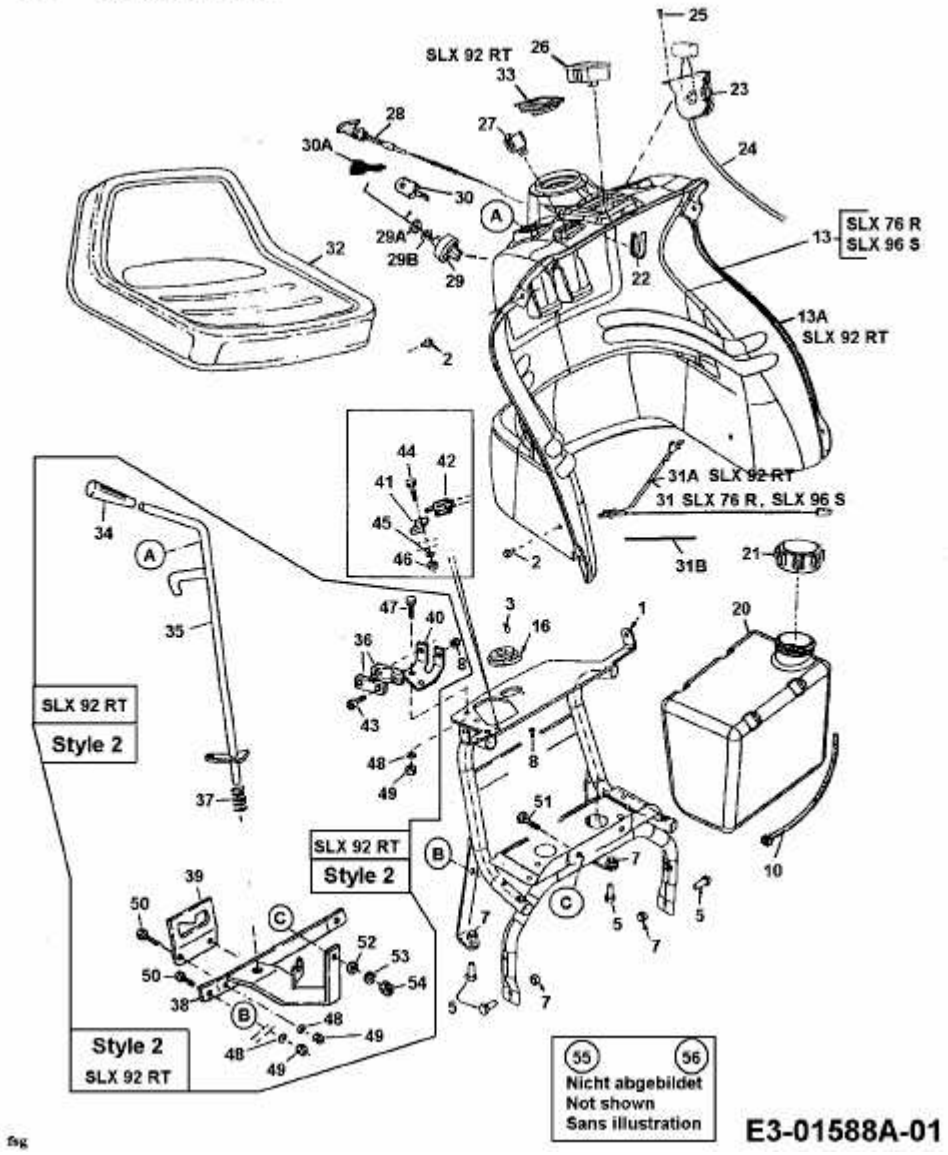
400 - TRANSMATIC