TA 4140 > 13AA473A643 (1998) > MOTORZUBEHÖR

Rider Models 400
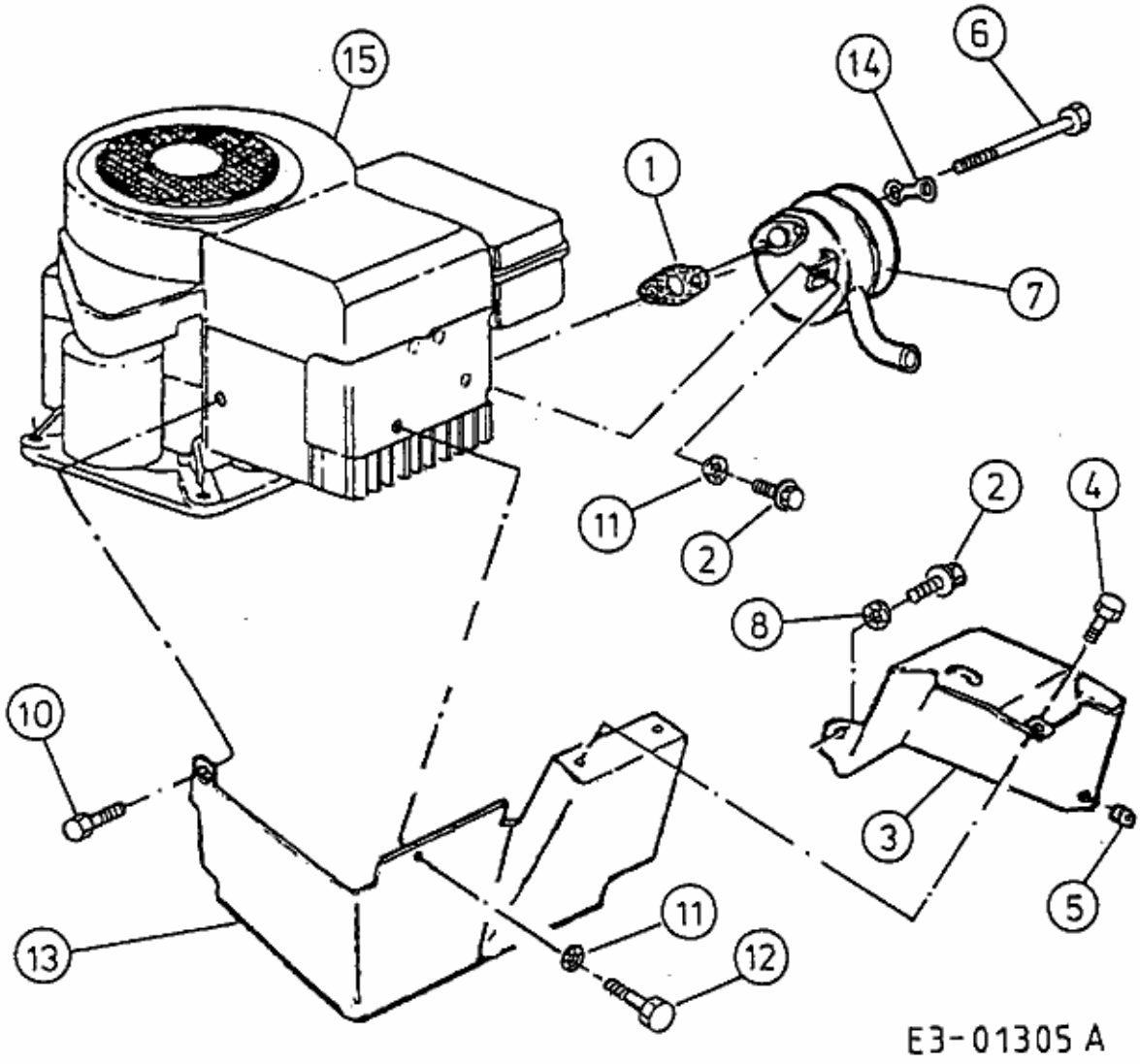
Engine B&S 28T707-1154-E1