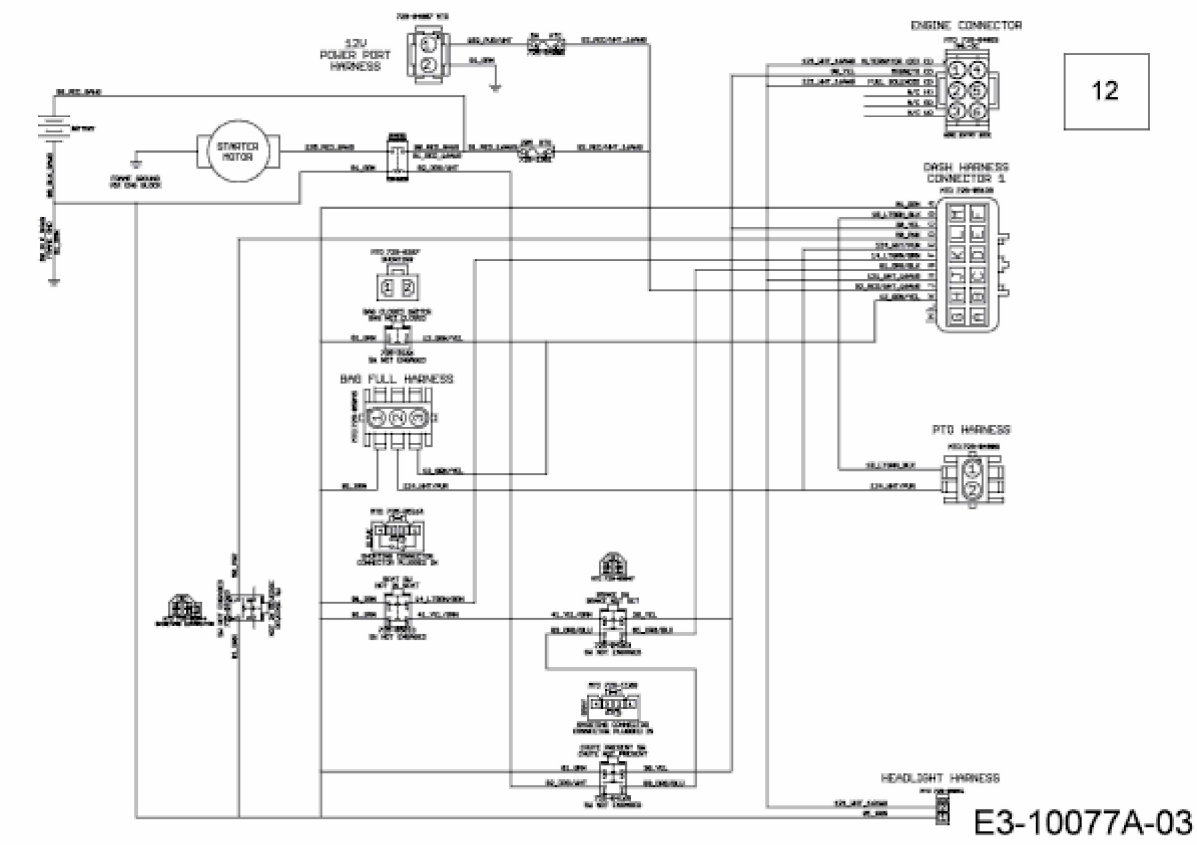
12V
POWER PORT
HARNESS
STARTER
MOTOR
ENGINE CONNECTOR
DASH HARNESS
CONNECTOR 1
BAG FULL HARNESS
PTO HARNESS
HEADLIGHT HARNESS
12
E3-10077A-03