CELEBRATION 105 H > 13A7498N686 (2005) > LENKUNG

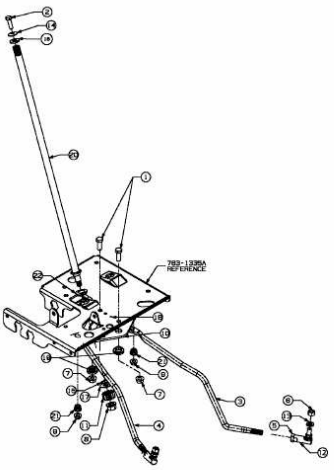

E3-02000A-01