CELEBRATION 105 H > 13A7498N686 (2005) > MOTORHAUBE 8-STYLE

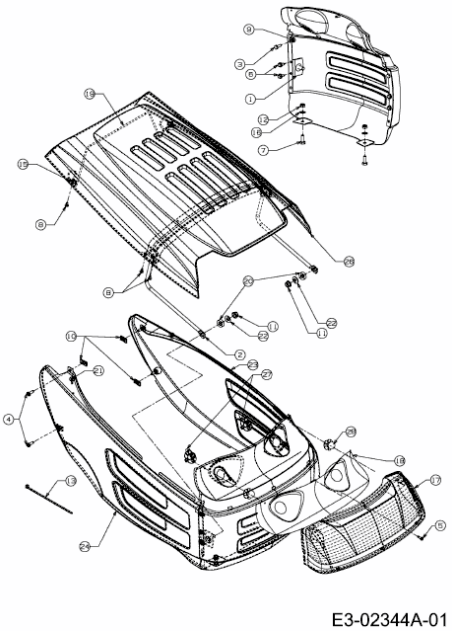

E3-02344A-01