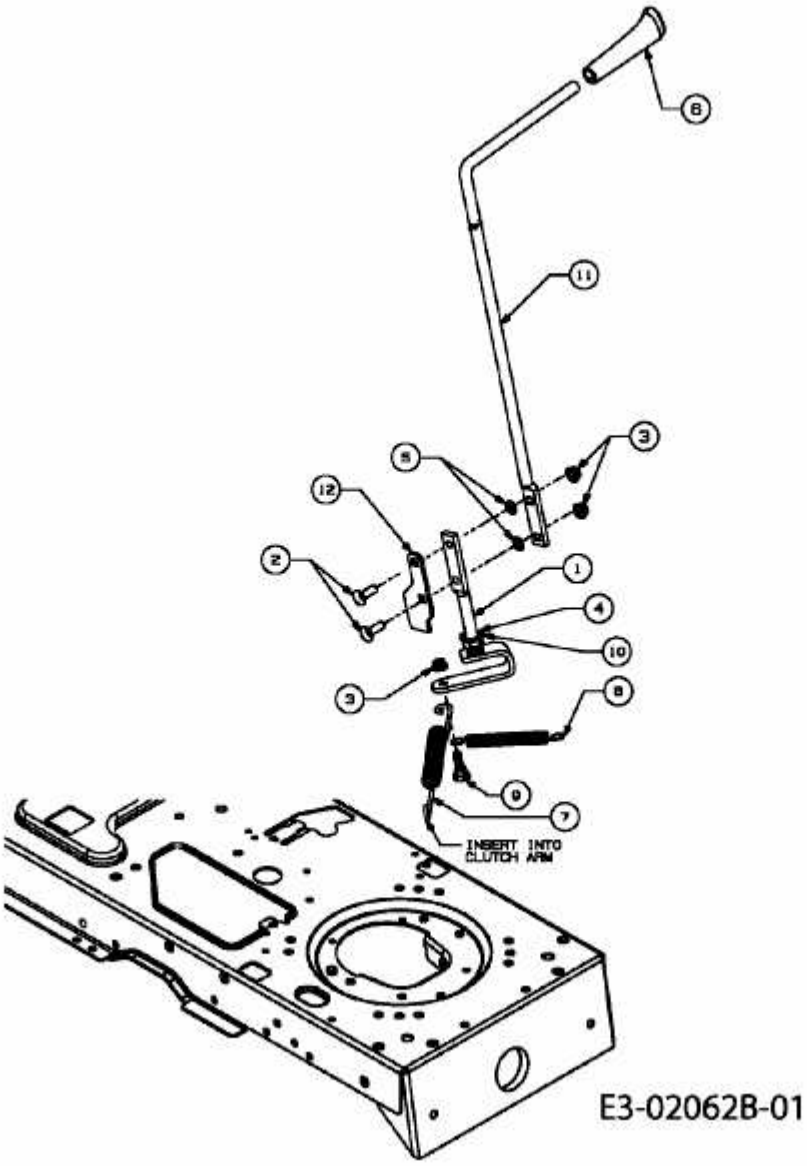
8
11
3
5
12
2
1
4
10
3
8
9
7
INSERT INTO CLUTCH ARM
E3-02062B-01