JN 200 AT > 13A7488N678 (2004) > ARMATURENBRETT

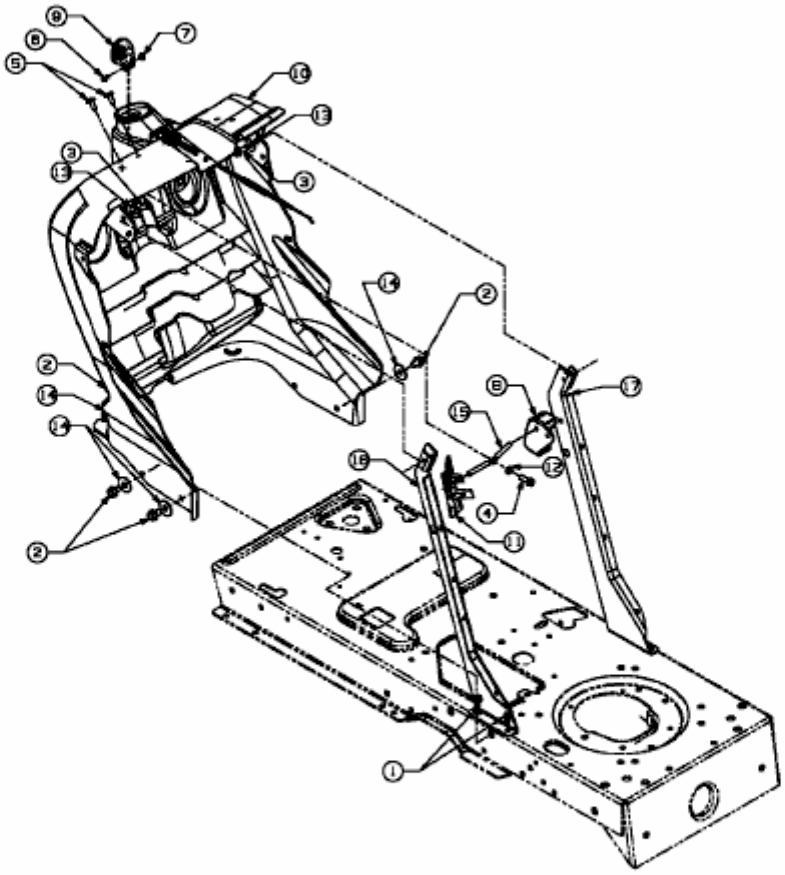

E3-02021A-01