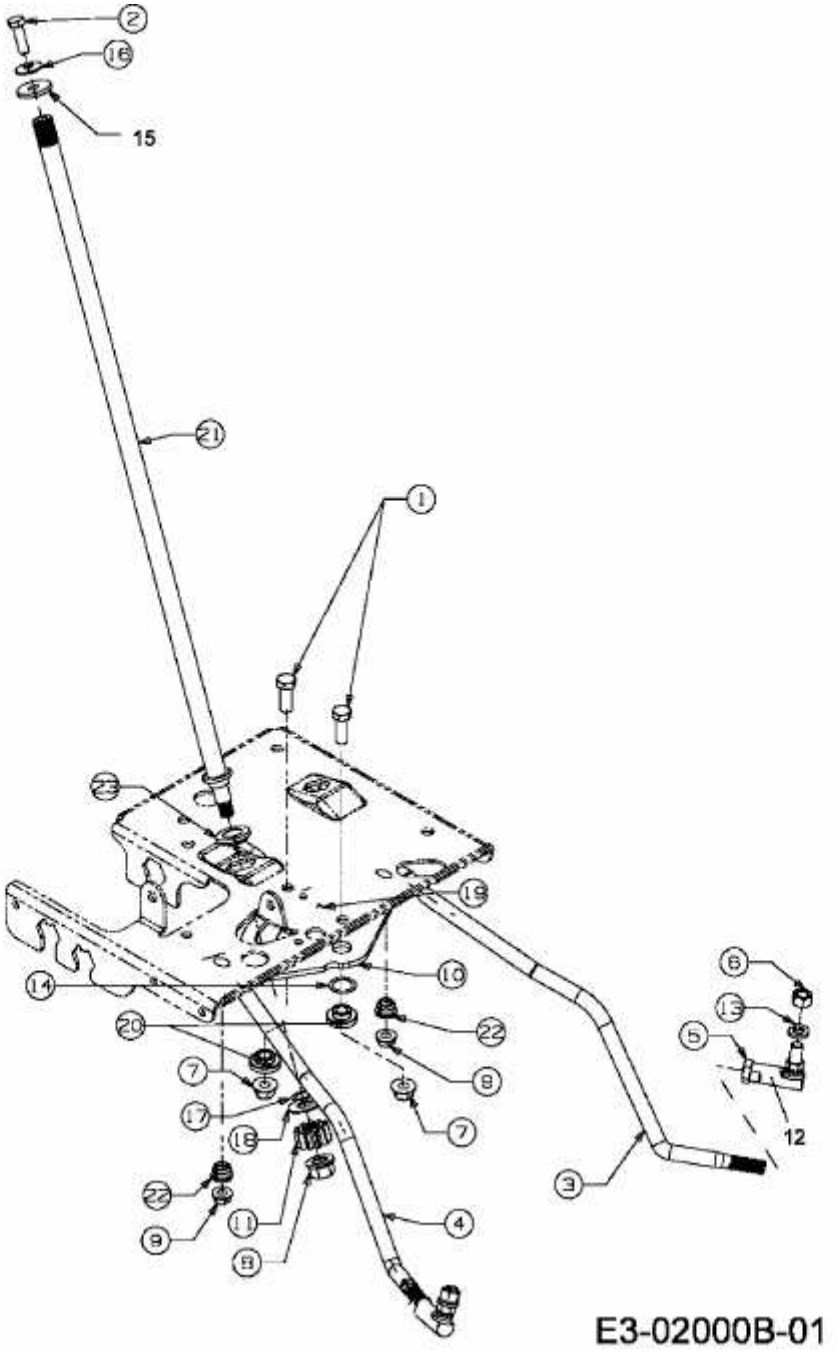JN 200 AT > 13A7483N678 (2007) > LENKUNG