MASTERCUT 60 L > 13A625JC659 (2015) > MOTOR BRIGGS & STRATTON

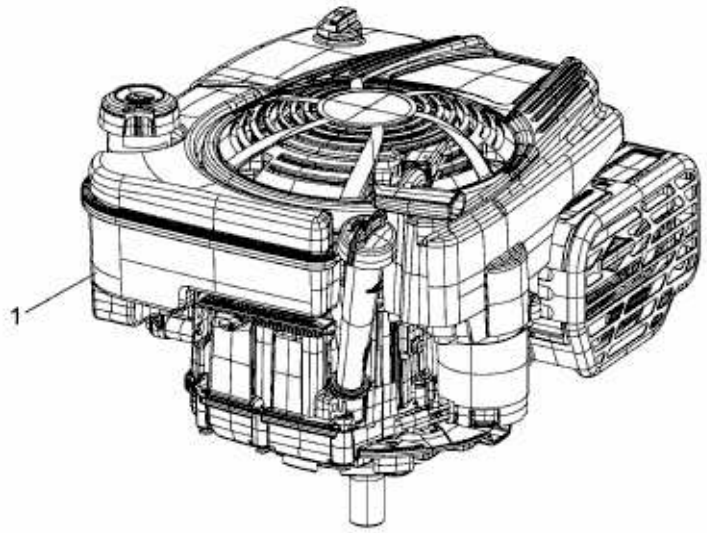

Briggs&Stratton
Model: 122S02
Type: 0002H1

E3-08293A-01